PLUMBING SPECIFICATIONS

GENERAL:

A. COORDINATE WITH ARCHITECTURAL DRAWINGS FOR ALL ACCESS PANELS.

B. INSTALL ALL PLUMBING SYSTEMS IN ACCORDANCE WITH THE REQUIRED PLUMBING CODES ON THESE DRAWINGS. INTERNATIONAL PLUMBING CODE REQUIREMENTS SHALL GOVERN WHEN ANY DISCREPANCY WITH REQUIREMENTS INDICATED ON THESE PLANS OCCUR.

C. PROVIDE MANUFACTURER'S STANDARD WARRANTY ON ALL PLUMBING SYSTEMS, BUT ALL PLUMBING SYSTEMS SHALL BE COVERED WITH WARRANTY FOR PARTS AND LABOR FOR A PERIOD NOT LESS THAN ONE YEAR FROM SUBSTANTIAL COMPLETION.

D. TEST HOT AND COLD WATER LINES FOR LEAKS IN ACCORDANCE WITH THE PLUMBING CODES REQUIRED ON THESE DRAWINGS.

E. CONTRACTOR SHALL PROVIDE FULL SUBMITTALS ON ALL PLUMBING EQUIPMENT, SYSTEMS AND COMPONENTS FOR ENGINEERING APPROVAL.

F. PROVIDE PLUMBING SYSTEM START UP SERVICES TO VERIFY PROPER OPERATION OF ALL SYSTEMS WITH OWNER'S REPRESENTATIVE WITNESS.

G. PROTECT PIPING, PIPING COMPONENTS, EQUIPMENT AND OTHER PLUMBING SYSTEMS FROM DAMAGE OF MOISTURE AND DIRT DURING CONSTRUCTION.

H. DO NOT ENCLOSE, COVER, OR PUT INTO OPERATION WATER DISTRIBUTION PIPING SYSTEM UNTIL IT HAS BEEN INSPECTED AND APPROVED BY THE AUTHORITY HAVING JURISDICTION.

I. TEST AND CLEAN ALL PIPING SYSTEMS IN ACCORDANCE WITH THE PLUMBING CODE INDICATED TO BE FOLLOWED ON THESE DRAWINGS.

J. DISINFECT ALL WATER DISTRIBUTION PIPING IN ACCORDANCE WITH THE PLUMBING CODE INDICATED TO BE FOLLOWED ON THESE DRAWINGS.

K. SEAL JOINTS BETWEEN PLUMBING FIXTURES AND WALLS, FLOORS, AND COUNTERS USING SANITARY-TYPE, 1-PART, MILDEW-RESISTANT, SILICONE SEALANT. MATCH SEALANT COLOR TO FIXTURE COLOR.

L. RECORD DRAWINGS - CONTRACTOR SHALL KEEP RECORD OF ALL CHANGES FROM THAT ACTUALLY SHOWN ON THE ISSUED FOR CONSTRUCTION DRAWINGS. UPON COMPLETION OF THIS PROJECT, THE CONTRACTOR SHALL TRANSMIT THESE CHANGES TO A RECORD SET OF DRAWINGS AND ON ELECTRONIC MEDIA IN PDF FORMAT. THE SET OF DRAWINGS SHALL INCLUDE ALL DRAWINGS, EVEN IF NO CHANGES WERE MADE. EACH "RECORD DRAWING" SHALL BE SO LABELED, DATED AND SIGNED BY THE CONTRACTOR.

M. COORDINATION OF WORK - COORDINATE WORK WITH THE ACTIVITIES AND FUNCTIONS OF THE OWNER AT ALL TIMES.

N. OPERATING MANUALS - THIS CONTRACTOR SHALL, BEFORE FINAL APPROVAL OF THE INSTALLATION, SUBMIT TO THE ARCHITECT FOR APPROVAL TWO (2) COPIES OF DESCRIPTIVE LITERATURE, INSTALLATION, MAINTENANCE AND OPERATION MANUALS INCLUDING PARTS LISTS OF EACH ITEM OF EQUIPMENT. ANY REQUIRED SPARE PARTS, KEYS, SOFTWARE, PASSWORDS AND COPIES OF WARRANTIES SHALL BE PROVIDED AT THIS TIME TO OWNER.

O. FURNISH AND INSTALL ALL NECESSARY BRACKETS, ANCHORS, CLAMPS, SPECIAL HANGERS, ETC., AS SHOWN OR REQUIRED FOR INSTALLATION OF ALL EQUIPMENT FURNISHED UNDER THIS CONTRACT. ALL EXTERIOR METALS SHALL BE GALVANIZED.

P. PERMITS AND FEES – CONTRACTOR SHALL OBTAIN ALL PERMITS AND PAY ALL FEES REQUIRED FOR THE WORK.

SERVICE ENTRANCE REQUIREMENTS

A. EXTEND BUILDING SANITARY DRAIN PIPING AND CONNECT TO SANITARY SEWER PIPING OF SIZE AND IN LOCATION INDICATED FOR SERVICE ENTRANCE TO BUILDING. INSTALL CLEANOUT AND EXTENSION TO GRADE AT CONNECTION OF BUILDING SANITARY DRAIN AND BUILDING SANITARY SEWER.

B. INSTALL SLEEVE AND MECHANICAL SLEEVE SEAL AT SERVICE PENETRATIONS THROUGH FOUNDATION WALL FOR WATERTIGHT INSTALLATION.

VALVES:

A. BALL VALVES
   1. BALL VALVES, 4 INCHES AND SMALLER: MSS SP-110, CLASS 150, 600-PSI CWP, ASTM B 584

PIPE INSULATION TYPES (SEE PIPING SCHEDULE ON PLANS FOR REQUIRED PIPE AND INSULATION SYSTEMS)

A. FG - FIBERGLASS PIPE COVERING: ONE PIECE OR HALF SECTIONAL OR SEMI-RIGID WRAP FIBERGLASS INSULATION: JACKETED WITH OWNES CORNING FIBERGLASS, OR EQUAL, ASJ ALL SERVICE VAPOR BARRIER JACKET.

B. CG - CELLULAR GLASS: ABOVE GROUND RIGID CELLULAR GLASS INSULATION; PITTSBURGH CORNING FOAMGLASS INSULATION, OR EQUAL.

C. EFSI - ELASTOMERIC FOAM SHEET INSULATION, PER ASTM C534, TYPE II, CLOSED CELL ELASTOMERIC MATERIAL, K VALUE: ASTM C518, 0.28 AT 75° F, MAXIMUM SERVICE TEMPERATURE: 180° F.

PIPE INSULATION JACKET TYPES (SEE PIPING SCHEDULE ON PLANS FOR REQUIRED PIPE AND INSULATION SYSTEMS):

A. ASJ - ALL SERVICE JACKET: WHITE, KRAFT-PAPER, FIBERGLASS-REINFORCED SCRIM WITH ALUMINUM-FOIL BACKING.

PIPE INSULATION GENERAL NOTES:

A. ALL INSULATION SHALL HAVE A MAXIMUM FLAME SPREAD OF 25 AND SMOKE RATING OF 50 OR LESS IN ACCORDANCE WITH ASTM E84 AND NFPA 255.

B. CELLULAR FOAM INSULATION TO CONFORM TO ASTM C534. INSTALL PER MANUFACTURER'S INSTRUCTIONS. PROVIDE INSULATION SHIELDS AND SADDLES. INSULATE ENTIRE SYSTEM, INCLUDING FITTINGS, VALVES, UNIONS, FLANGES, STRAINERS, FLEXIBLE CONNECTIONS, PUMP BODIES, AND EXPANSION JOINTS. PROVIDE PVC FITTING COVERS OVER ALL MOLDED INSULATION.

C. PROPERLY MARK AND SHOW DIRECTION OF ALL PIPING.

D. REFER TO PIPE/INSULATION SCHEDULE FOR MORE INFORMATION.

PIPING SPECIFICATIONS - REFER TO PIPE/INSULATION SCHEDULE

SANITARY SEWER, VENT AND STORM DRAIN PIPING:

A. BURIED, BELOW SLAB OR WITHIN FIVE FEET OF BUILDING AND ABOVE GROUND.
   1. PVC SCHEDULE 40 DWV PIPING IN ACCORDANCE WITH ASTM D-1785 AND ASTM D-2665.
      a. FITTINGS: PVC SCHEDULE 40 DWV.
      b. JOINTS: SOLVENT WELDING.

WATER PIPING:

A. ABOVE GRADE
   1. COPPER: ASTM B88, TYPE L OR K, HARD DRAWN.
      a. FITTINGS: ASME B16.18, CAST BRONZE, OR ASME B16.22, WROUGHT.
      b. JOINTS: ASTM B32, SOLDER, GRADE 95TA.

BELOW GRADE / SLAB PIPING WORK:

A. EXCAVATION, TRENCHING AND BACKFILL TO BE IN ACCORDANCE WITH CIVIL CONTRACTOR CONSTRUCTION DOCUMENTS (WHERE PROVIDED).

B. GRADE TRENCH BOTTOM TO PROVIDE SMOOTH, FIRM, STABLE, AND ROCK FREE FOUNDATION THROUGHOUT LENGTH OF PIPING.

C. SHAPE BOTTOM OF TRENCH TO FIT BOTTOM OF PIPING.

D. FILL UNEVENNESS WITH TAMPED-SAND OR CLEAN 3/8-INCH LIMESTONE CHIP BEDDING AND PROPERLY COMPACT BEDDING (WITH AT LEAST 4" DEPTH). SEE MANUFACTURER'S SPECIFIC BURY REQUIREMENTS FOR SELECTED PRODUCT.

E. REMOVE UNSTABLE, SOFT, AND UNSUITABLE MATERIALS AT SURFACE ON WHICH PIPING IS TO BE LAID BELOW SLAB.

F. BACKFILL WITH CLEAN 3/8-INCH LIMESTONE CHIP, TO REQUIRED WATER SUPPLY PIPE INSTALLATION DEPTH PROPERLY COMPACT BEDDING. SEE MANUFACTURER'S SPECIFIC BURY REQUIREMENTS FOR SELECTED PRODUCT.

G. DRAINAGE PIPING TO BE PROVIDED GRANULAR BACKFILL, A MINIMUM OF TWO TIMES THE PIPE'S DIAMETER, USING 3/8" CLEAN GRAVEL (CA-16) BACKFILL ALL AROUND PIPE.

H. SOIL SHALL BE FREE OF CONTAMINANTS (I.E., PETROLEUM PRODUCTS INSECTICIDES, ETC.)

I. MINIMUM DEPTH OF BACKFILL COVERING TO BE 12" FOR ALL PIPING

J. INSTALL ALL BELOW GRADE/SLAB PIPING SYSTEMS PER SYSTEM MANUFACTURER'S RECOMMENDATIONS.

HANGERS AND SUPPORTS

A. PIPE SHALL BE SUPPORTED BY CLEVIS OR TRAPEZE HANGERS WITH SUSPENSION RODS HAVING DOUBLE NUTS.

B. COMPLY WITH MSS SP-58, MSS SP-69 AND MSS SP-89

C. BRACKETS OR CLAMPS MAY BE USED WHERE PIPE RUNS ALONG WALLS, COLUMNS, OR CEILINGS BUT MUST ALLOW FOR EXPANSION AND CONTRACTION.

D. RADIAL SUPPORTS SHALL BE RIGID TYPE. IF WALL BRACKETS OR LONGITUDINAL SUPPORTS ARE USED ON STRAIGHT LENGTHS OVER 20 FEET LONG, THEY SHALL BE OF THE FLEXIBLE TYPE TO PROVIDE FOR THERMAL EXPANSION AND CONTRACTION.

E. HANGERS SHALL BE PROPERLY ISOLATED TO PREVENT NOISE TRANSMISSION (WITH A THIN LAYER OF RESILIENT MATERIAL BETWEEN THE PIPE AND SUPPORT).

F. HANGERS AND SUPPORTS SHALL BE PLACED WITHIN 2 FEET FROM EACH CHANGE IN DIRECTION.

G. WHEN PIPES ARE TO BE INSULATED, THE SIZE AND POSITION OF HANGER SHALL BEAR ON THE OUTSIDE OF THE INSULATION.

H. ALL HANGERS SUPPORTING COPPER PIPE SHALL BE COPPER PLATED TO PROVIDE A GALVANIC SEPARATION.

I. INCLUDE A SAFETY FACTOR OF 5 FOR SUPPORT AND HANGER DESIGN.

J. MAXIMUM HANGER SPACING AND MINIMUM HANGER ROD SIZES:

PIPE SPECIFICATIONS TABLE

COPPER PIPE SIZE (INCH)	MIN. ROD DIAM. (INCH)	HANGER SPACING
UP TO 1"	3/8"	5' - 0"
1-1/2"	3/8"	8' - 0"
2"	3/8"	5' - 0"
PVC PIPE SIZE (INCH)	MIN. ROD DIAM. (INCH)	
UP TO 1"	3/8"	4' - 0"
1-1/4"	3/8"	4' - 0"
1-1/2"	3/8"	5' - 0"
2"	1/2"	4' - 0"
2-1/2"	1/2"	6' - 0"
3"	1/2"	6' - 0"
4"	5/8"	6' - 0"

PIPE SLEEVES

A. SLEEVES SHALL BE PLACED IN WALLS, ROOF, CEILINGS, AND FLOORS THROUGH WHICH PIPES PASS AND SHALL EXTEND 1" ON EACH SIDE.

B. SLEEVES SHALL BE MADE OF PIPE OR FORMED GALVANIZED STEEL OR FORMED PLASTIC SLEEVES (HILTI).

C. THE SPACE BETWEEN THE PIPE AND THE SLEEVE MUST BE FILLED WITH INSULATION AND A RESILIENT MATERIAL.

D. PIPING MUST NOT ENCOUNTER THE WALLS, ROOF, CEILING, OR FLOOR.

ROOF, FLOOR, AND EXTERIOR WALL PENETRATIONS

A. THE CONTRACTOR SHALL BE RESPONSIBLE FOR THE SEALING OF ALL ROOF, WALL, AND FLOORS PENETRATIONS REQUIRED BY THE CONTRACTOR IN THE PERFORMANCE OF THIS WORK. THIS SHALL INCLUDE ALL INSULATED AND UNINSULATED PIPING INSTALLED BY THE CONTRACTOR. FOR UNINSULATED PIPING, THE CONTRACTOR SHALL APPLY A MINIMUM OF THREE LINEAR FEET OF 2" THICK PIPE COVERING TO THE PIPING ON EACH SIDE OF A WALL, ROOF, OR FLOOR.

CONNECTION OF DISSIMILAR METALS

A. PROVIDE DIELECTRIC CONNECTORS/UNIONS/FLANGES OR MAHONEY KITS AT THE CONNECTION OF DISSIMILAR METALS.

PLUMBING EQUIPMENT AND FIXTURES

A. ALL PLUMBING FIXTURES, PLUMBING EQUIPMENT AND OTHER PLUMBING ITEMS SHALL BE THE BASIS OF DESIGN LISTED ON DRAWINGS OR SHALL BE AN APPROVED EQUAL IN LEVEL OF PERFORMANCE, QUALITY, DURABILITY, CONSTRUCTION, CAPACITY, REQUIREMENTS AND SAME FEATURES AND BENEFITS OF BASIS OF DESIGN LISTED ON DRAWINGS.

B. INSTALL ALL PLUMBING FIXTURES, PLUMBING EQUIPMENT AND OTHER PLUMBING ITEMS IN ACCORDANCE WITH THEIR MANUFACTURER'S RECOMMENDATIONS.

C. PROVIDE METAL ANGLE STOP VALVES AT ALL FIXTURES FOR INDIVIDUAL FIXTURE ISOLATION.

D. PROVIDE CHROME PLATED ESCUTCHEON PLATES AT WALL PENETRATIONS.

GENERAL NOTES

A. INSTALL ALL PLUMBING SYSTEMS TO COMPLY WITH THE INTERNATIONAL PLUMBING CODE.

B. INVERT ELEVATIONS ARE BASED ON ACTUAL GROUND LEVEL FINISHED FLOOR ELEVATION OF 430.05'.

C. INSTALL ALL PLUMBING SYSTEMS AND EQUIPMENT IN ACCORDANCE WITH MANUFACTURER'S RECOMMENDATIONS.

D. INSTALL ALL BURIED PIPING 12" BELOW ESTABLISHED FROST LINE OF THE AREA THIS PROJECT IS LOCATED. COORDINATE INVERT ELEVATIONS OF ALL BUILDING SERVICE PIPING WITH SITE CIVIL/ELECTRICAL WORK.

E. PROVIDE WATER TEST FOR DRAINAGE SYSTEM WITH ALL APPROPRIATE PERSONS IN ATTENDANCE. THE SYSTEM SHALL BE WATER TIGHT AT ALL POINTS.

F. ALLOW FOR EXPANSION AND CONTRACTION DURING INSTALLATION OF PIPING. INSTALL HANGERS AND SUPPORTS PER APPLICABLE CODE (MINIMUM) AND MANUFACTURER'S RECOMMENDATIONS, WHICHEVER IS MORE STRINGENT. COORDINATE WITH APPROPRIATE UTILITY COMPANY FOR CONNECTIONS OF MAIN SERVICES AND SUPPORT OF UTILITY EQUIPMENT. INSTALL VALVES WITH STEMS UPRIGHT OR HORIZONTAL, NEVER INVERTED.

G. UNLESS NOTED OTHERWISE, ALL WASTE PIPING 3" TO 6" IN DIAMETER TO BE SLOPED 1/8" PER FOOT. ALL WASTE PIPING 2-1/2" AND SMALLER TO BE SLOPED 1/4" PER FOOT. SLOPE WATER PIPING AND ARRANGE TO DRAIN AT LOW POINTS.

H. PROVIDE WATER TEST ON WATER SUPPLY SYSTEM WITH ALL APPROPRIATE PERSONS IN ATTENDANCE. PROVIDE WATER BALANCING TEST REPORT FOR ANY HOT WATER CIRCULATING SYSTEM. ENSURE ALL WATER SUPPLY SYSTEMS ARE PH BALANCED AND DISINFECTED PROPERLY IN ACCORDANCE WITH THE PLUMBING CODE(S) BEFORE FINAL ACCEPTANCE.

I. PROVIDE CLEARANCE FOR INSTALLATION OF INSULATION AND ACCESS TO VALVES AND FITTINGS. PIPING NOT TO BE LOCATED IN THE DEDICATED ELECTRICAL SPACE 6'-0" ABOVE THE ELECTRICAL PANELS. DRIP PANS ARE REQUIRED IF PIPING MUST ENTER THE ELECTRICAL SPACE. DRIP PANS ARE TO BE FURNISHED AND INSTALLED BY PC.

J. PROVIDE DIELECTRIC UNIONS OR DIELECTRIC SEPARATION CONNECTOR FOR CONNECTIONS OF DISSIMILAR MATERIALS.

K. PROVIDE TRAP SEAL GUARDS FOR ALL FLOOR DRAINS.

L. COORDINATE INSTALLATION OF PIPING WITH DUCTWORK, SPRINKLERS, ELECTRICAL, STRUCTURAL, AND GC.

M. MAKE ALL FINAL CONNECTIONS TO FIXTURES.

N. INSTALL PIPING AS CLOSE TO STRUCTURE AS POSSIBLE TO ALLOW INSTALLATION OF MECHANICAL AND ELECTRICAL SYSTEMS. COORDINATE EXACT LOCATION WITH OTHER ABOVE CEILING / OVERHEAD TRADES PRIOR TO WORK.

O. CONTRACTOR TO VERIFY INVERT ELEVATIONS RELATIVE TO FOOTINGS AND CROSSING LINES PRIOR TO WORK.

P. INSULATE ALL DOMESTIC HOT WATER AND COLD WATER PER SPECIFICATIONS.

Q. ROUTING AND FINAL COORDINATION IS BY INSTALLING CONTRACTOR. PIPING SHOWN IS DIAGRAMMATIC IN NATURE ONLY.

R. CONTRACTOR TO VERIFY FOOTINGS PRIOR TO EXCAVATION.

S. ALL PIPING, VALVES, AND PIPING COMPONENTS INSTALLED IN DOMESTIC WATER LINES SHALL BE RATED FOR POTABLE WATER USE EXCEPT WHERE PIPING SYSTEMS ARE INDICATED FOR NON-POTABLE WATER USE.

T. ALL VENTS TO BE INSTALLED MINIMUM 10' FROM ANY OUTDOOR AIR INTAKES.

U. PROVIDE PIPE SLEEVES FOR ANY THRU CONCRETE/MASONRY WALL PIPE PENETRATIONS. PROVIDE MECHANICAL LINK SEAL OR HYDRAULIC CEMENT AROUND ANY THRU BELOW GRADE CONCRETE/MASONRY PENETRATION INTO BUILDING.

V. PROVIDE FIRESTOPPING AROUND ALL PLUMBING PENETRATIONS THRU FIRE RATED WALLS FILLING ANNUAL SPACE AROUND PENETRATION. SEE ARCHITECTURAL LIFE SAFETY PLANS FOR RATED WALL LOCATIONS.

W. OFFSET ALL VENT PIPING AT ROOF. VENT THROUGH ROOF TERMINATIONS SHALL MAINTAIN 5' DISTANCE FROM EDGE OF ROOF.

X. PROVIDE QUARTER TURN BALL, STOP OR BUTTERFLY TYPE VALVES FOR SHUT-OFF ISOLATION VALVES AT PIPING CONNECTION TO ALL EQUIPMENT, PLUMBING FIXTURES, AND BRANCHES OR WHERE INDICATED ON DRAWINGS.

Y. ALL PIPING SHALL BE INSTALLED CLEAR OF DOORS & WINDOWS.

CODES AND STANDARDS

- 2021 INTERNATIONAL PLUMBING CODE (WITH CITY OF ST. PETERS AMENDMENTS)
- 2021 INTERNATIONAL BUILDING CODE (WITH CITY OF ST. PETERS AMENDMENTS)
- 2021 INTERNATIONAL ENERGY CONSERVATION CODE (WITH CITY OF ST. PETERS AMENDMENTS)

SEISMIC RESTRAINTS

ALL SEISMIC RESTRAINTS SHALL BE APPLIED WHERE REQUIRED PER ASCE 7, IBC, AND SMACNA SEISMIC RESTRAINT MANUAL.

SEISMIC-RESTRAINT LOADING:

SEISMIC DESIGN CATEGORY: C
SEISMIC DESIGN SITE CLASS AS DEFINED IN THE IBC: D
SEISMIC OCCUPANCY CATEGORY AS DEFINED IN THE IBC: II
SEISMIC COMPONENT IMPORTANCE FACTOR: NAT. GAS=1.5, ALL OTHER=1.0
MAPPED SPECTRAL RESPONSE ACCELERATION AT SHORT PERIODS (0.2 SECOND): 0.37
MAPPED SPECTRAL RESPONSE ACCELERATION AT 1-SECOND PERIOD: 0.17

EXACT SEISMIC RESTRAINT MOUNTING, SIZE, QUANTITY, TYPE, AND LOCATION OF RESTRAINT SHALL BE DETERMINED BY THE RESTRAINT MANUFACTURER'S PROFESSIONAL DESIGN ENGINEER BASED ON EQUIPMENT THAT WILL BE INSTALLED IN THE CORRESPONDING SEISMIC DESIGN CATEGORY WHERE BUILDING IS LOCATED.

THE SEISMIC CONTROL PRODUCT MANUFACTURER'S PROFESSIONAL ENGINEER SHALL BE RESPONSIBLE FOR THE SEISMIC DESIGN CALCULATIONS OF THE SEISMIC RESTRAINT SYSTEM AND SHALL SELECT SEISMIC RESTRAINT COMPONENTS REQUIRED FOR THE MECHANICAL SYSTEM.

SHEET INDEX

P001	PLUMBING ABBREVIATIONS, NOTES, AND SYMBOLS
P100	PLUMBING UNDERGROUND PLAN
P101	PLUMBING FLOOR PLAN
P501	PLUMBING DETAILS
P601	PLUMBING SCHEDULES
TOTAL: 5	

ABBREVIATIONS

AHJ	-	AUTHORITY HAVING JURISDICTION
AFF	-	ABOVE FINISHED FLOOR
CI	-	CAST IRON
DCW	-	DOMESTIC COLD WATER
DHW	-	DOMESTIC HOT WATER
DN	-	DOWN
DWV	-	DRAIN, WASTE, AND VENT
EC	-	ELECTRICAL CONTRACTOR
EM	-	EQUIPMENT MANUFACTURER
EXG	-	EXISTING
FCO	-	FLOOR CLEANOUT
FD	-	FLOOR DRAIN
FFE	-	FINISHED FLOOR ELEVATION
FP	-	FIRE PROTECTION
FPT	-	FEMALE PIPE THREAD
FS	-	FLOOR SINK
GC	-	GENERAL CONTRACTOR
HB	-	HOSE BIBB
IE	-	INVERT ELEVATION
IWH	-	INSTANTANEOUS WATER HEATER
MAX	-	MAXIMUM
MC	-	MECHANICAL CONTRACTOR
MIN	-	MINIMUM
MPT	-	MALE PIPE THREAD
NTS	-	NOT TO SCALE
PC	-	PLUMBING CONTRACTOR
SAN	-	SANITARY
SS	-	SANITARY SEWER
TMV	-	THERMOSTATIC MIXING VALVE
UNO	-	UNLESS NOTED OTHERWISE
V	-	VENT
VTR	-	VENT THROUGH ROOF

SYMBOLS LEGEND

- SANITARY WASTE LINE (SS)
- VENT LINE (V)
- COLD WATER (DCW)
- HOT WATER (DHW)
- BALL OR GATE VALVE
- UNION
- PIPE UP
- PIPE DOWN
- REVISION
- KEYNOTE
- CONNECT TO EXISTING

powers brown architecture

PROJECT TITLE

AXIUM BTS EXPANSION - ST. PETERS

4001 PREMIER PARKWAY
ST. PETERS, MISSOURI 63301

A PROJECT FOR

PEAK CONSTRUCTION

GENERAL NOTES

CONSULTANT:

SOLUTIONS AEC
OPTIMIZING THE BUILT ENVIRONMENT
10024 Office Center Avenue
Suite 201
St. Louis, MO 63128
(314) 966.6299

© 2026 Solutions AEC, LLC

△	DATE	REVISION
	2026-04-17	PERMIT

PROJECT NO: 267020
DRAWN BY: BTF
CHECKED BY: MBS

SHEET NAME

PLUMBING ABBREVIATIONS, NOTES, AND SYMBOLS

SEAL

STATE OF MISSOURI
MATTHEW BRIAN SPENCER
NUMBER
PE-2010000867
PROFESSIONAL ENGINEER
04/17/26
LICENSE EXPIRES 12/31/2026

SHEET NUMBER

P001

COPYRIGHT © 2026 POWERS BROWN ARCHITECTURE THIS DRAWING AND THE ARCHITECTURAL WORK DEPICTED THEREON ARE THE SOLE PROPERTY OF POWERS BROWN ARCHITECTURE. NO PORTION OF THIS DRAWING MAY BE COPIED WITHOUT THE EXPRESS WRITTEN CONSENT OF THE ARCHITECT

Autodesk Docs://1378-25-01 Axium Packaging/1378-25-01 Warehouse Expansion SAEC25.rvt
4/17/2026 10:45:13 AM

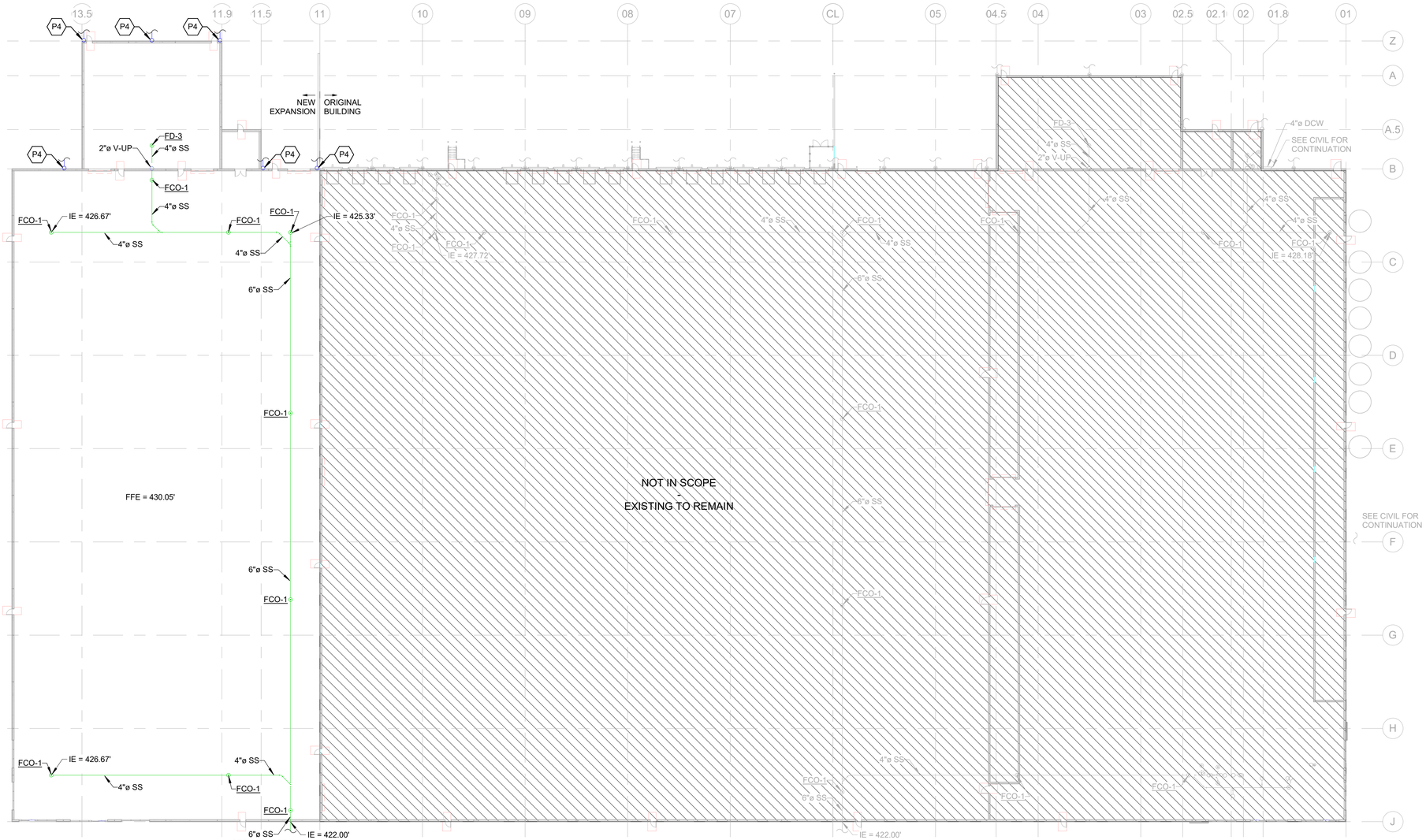

1 PLUMBING UNDERGROUND PLAN

1/32" = 1'-0"

GENERAL SHEET NOTES

A. REFER TO PLUMBING LEGEND, SYMBOLS, NOTES, AND ABBREVIATIONS FOR MORE INFORMATION.

B. CONTRACTOR SHALL READ AND UNDERSTAND ALL ARCHITECTURAL AND PLUMBING DRAWINGS RELATED TO THE PROJECT AND PERFORM WORK TO ALL RELATIVE PLUMBING CODES AND STANDARDS.

C. ROUTE ALL NEW SANITARY MAIN PIPING AS DEEP AS POSSIBLE TO ALLOW FOR FUTURE EXPANSION. FIELD VERIFY CONNECTION INVERT ELEVATION PRIOR TO TRENCHING.

D. PROVIDE FLOOR DRAIN TRAP SEAL GUARD INSERTS AT ALL FLOOR DRAINS.

E. MAINTAIN MINIMUM 36'-0" CLEAR HEIGHT WITHIN WAREHOUSE SPACE AREAS (OR HEIGHT DIRECTED BY TENANT/ARCHITECT) BELOW ALL SUSPSENDED HVAC EQUIPMENT, DUCTWORK, PIPING, FIRE PROTECTION SYSTEMS AND LIGHTING UNLESS NOTED DIFFERENTLY.

F. NO ITEMS OR OBSTRUCTIONS SHALL BE INSTALLED BELOW 36'-0" AFF ABOVE WAREHOUSE AREA WITHOUT WRITTEN APPROVAL OF TENANT (CLEAR HEIGHT SHALL BE VERIFIED WITH TENANT/ARCHITECT PRIOR TO START OF WORK).

SHEET KEYNOTES

P4 PROVIDE CONNECTION FROM DOWNSPOUT TO SITE STORM PIPING. REFER TO ARCHITECTURAL AND CIVIL DRAWINGS FOR MORE INFORMATION.

DRAWING INFORMATION

0 16' 32' 64'

SCALE: 1/32" = 1'-0"

NORTH

powers brown architecture

PROJECT TITLE

AXIUM BTS EXPANSION - ST. PETERS

4001 PREMIER PARKWAY
ST. PETERS, MISSOURI 63301

A PROJECT FOR

PEAK CONSTRUCTION

GENERAL NOTES

CONSULTANT:

SOLUTIONS AEC
OPTIMIZING THE BUILT ENVIRONMENT
10024 Office Center Avenue
Suite 201
St. Louis, MO 63128
(314) 966.6299
© 2026 Solutions AEC, LLC

△	DATE	REVISION
	2026-04-17	PERMIT

PROJECT NO: 267020
DRAWN BY: BTF
CHECKED BY: MBS

SHEET NAME

PLUMBING UNDERGROUND PLAN

SEAL

STATE OF MISSOURI
MATTHEW BRIAN SPENCER
NUMBER
PE-2010000867
PROFESSIONAL ENGINEER
04/17/26
LICENSE EXPIRES 12/31/2026

SHEET NUMBER

P100

COPYRIGHT © 2026 POWERS BROWN ARCHITECTURE. THIS DRAWING AND THE ARCHITECTURAL WORK ATTACHED THERETO ARE THE SOLE PROPERTY OF POWERS BROWN ARCHITECTURE. REPRODUCTION OF THIS DRAWING MAY BE DONE ONLY WITH THE EXPRESS WRITTEN CONSENT OF THE ARCHITECT.

Autodesk Docs://1378-25-01 Axium Packaging/1378-25-01 Warehouse Expansion SAEC25.rvt
4/17/2026 10:45:14 AM

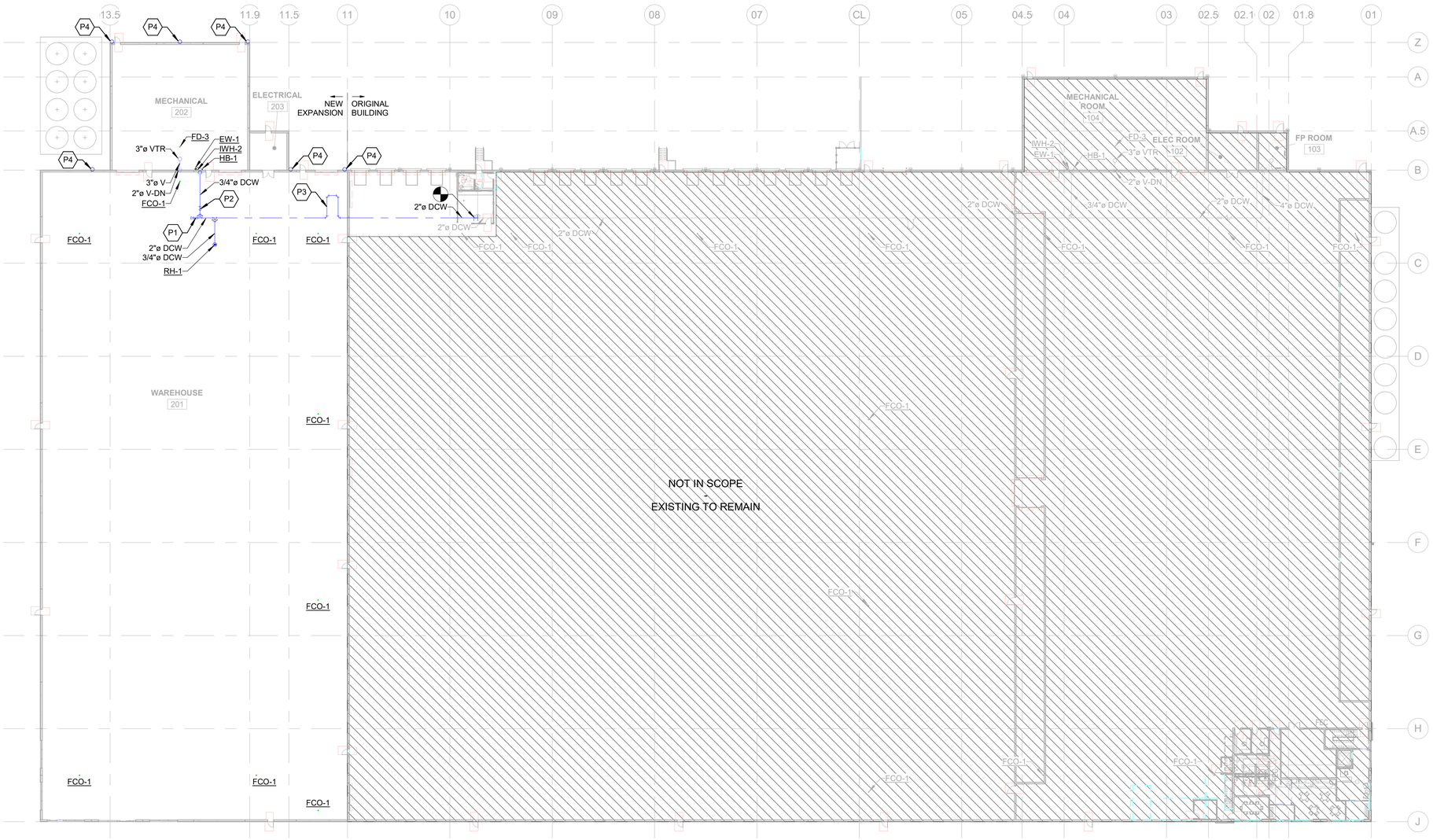

1 PLUMBING FLOOR PLAN

1/32" = 1'-0"

GENERAL SHEET NOTES

A. REFER TO PLUMBING LEGEND, SYMBOLS, NOTES, AND ABBREVIATIONS FOR MORE INFORMATION.

B. CONTRACTOR SHALL READ AND UNDERSTAND ALL ARCHITECTURAL AND PLUMBING DRAWINGS RELATED TO THE PROJECT AND PERFORM WORK TO ALL RELATIVE PLUMBING CODES AND STANDARDS.

C. ROUTE ALL NEW SANITARY MAIN PIPING AS DEEP AS POSSIBLE TO ALLOW FOR FUTURE EXPANSION. FIELD VERIFY CONNECTION INVERT ELEVATION PRIOR TO TRENCHING.

D. PROVIDE FLOOR DRAIN TRAP SEAL GUARD INSERTS AT ALL FLOOR DRAINS.

E. MAINTAIN MINIMUM 36'-0" CLEAR HEIGHT WITHIN WAREHOUSE SPACE AREAS (OR HEIGHT DIRECTED BY TENANT/ARCHITECT) BELOW ALL SUSPSENDED HVAC EQUIPMENT, DUCTWORK, PIPING, FIRE PROTECTION SYSTEMS AND LIGHTING UNLESS NOTED DIFFERENTLY.

F. NO ITEMS OR OBSTRUCTIONS SHALL BE INSTALLED BELOW 36'-0" AFF ABOVE WAREHOUSE AREA WITHOUT WRITTEN APPROVAL OF TENANT (CLEAR HEIGHT SHALL BE VERIFIED WITH TENANT/ARCHITECT PRIOR TO START OF WORK).

SHEET KEYNOTES

P1 FURNISH AND INSTALL LINE-SIZED SHUTOFF VALVE AND CAP 2" DIAMETER COLD WATER PIPING FOR FUTURE OFFICE BUILD-OUT.

P2 FURNISH AND INSTALL LINE-SIZED SHUTOFF VALVE ON 3/4" DIAMETER COLD WATER PIPING.

P3 INSTALL 12'-0" X 6'-0" THERMAL EXPANSION "U" LOOP ON DOMESTIC COLD PIPING.

P4 PROVIDE CONNECTION FROM DOWNSPOUT TO SITE STORM PIPING. REFER TO ARCHITECTURAL AND CIVIL DRAWINGS FOR MORE INFORMATION.

DRAWING INFORMATION

0 16' 32' 64'

SCALE: 1/32" = 1'-0"

NORTH

powers brown architecture

PROJECT TITLE

AXIUM BTS EXPANSION - ST. PETERS

4001 PREMIER PARKWAY
ST. PETERS, MISSOURI 63301

A PROJECT FOR

PEAK CONSTRUCTION

GENERAL NOTES

CONSULTANT:

SOLUTIONS AEC
OPTIMIZING THE BUILT ENVIRONMENT
10024 Office Center Avenue
Suite 201
St. Louis, MO 63128
(314) 966.6299
© 2026 Solutions AEC, LLC

△	DATE	REVISION
	2026-04-17	PERMIT

PROJECT NO: 267020
DRAWN BY: BTF
CHECKED BY: MBS

SHEET NAME

PLUMBING FLOOR PLAN

SEAL

STATE OF MISSOURI
MATTHEW BRIAN SPENCER
NUMBER
PE-2010000867
PROFESSIONAL ENGINEER
04/17/26
LICENSE EXPIRES 12/31/2026

SHEET NUMBER

P101

COPYRIGHT © 2026 POWERS BROWN ARCHITECTURE. THIS DRAWING AND THE ARCHITECTURAL WORK REFLECTED THEREON ARE THE SOLE PROPERTY OF POWERS BROWN ARCHITECTURE. REPRODUCTION OF THIS DRAWING MAY BE DONE ONLY WITH THE EXPRESS WRITTEN CONSENT OF THE ARCHITECT.

Autodesk Docs://1378-25-01 Axium Packaging/1378-25-01 Warehouse Expansion SAEC25.rvt
4/17/2026 10:45:18 AM

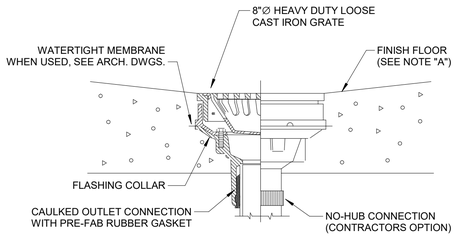

NOTE "A"
G.C. SHALL SLOPE FLOOR-1/2" FROM FINISH FLOOR ELEVATION A MINIMUM OF 4'-0" BEYOND DRAIN. (1/8" PER FT.)

9 FLOOR DRAIN (UNFINISHED AREAS)
NTS

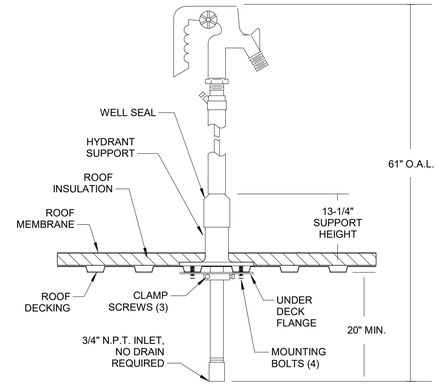

5 FREEZEPROOF ROOF HYDRANT
NTS

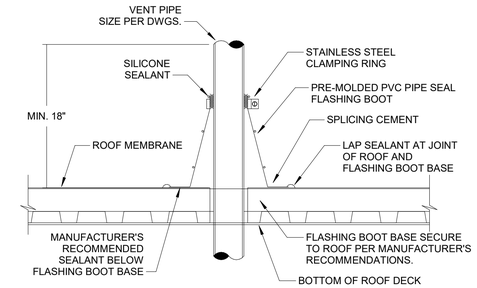

PIPE FLASHING BOOT BASE TO BE INSTALLED BELOW THE NEW ROOF. COORDINATE WITH ROOFING CONTRACTOR.

STEPPED UV RATED POLYVINYL CHLORIDE FLASHING BOOT FABRICATED BY THE PATE COMPANY

INSTALL PIPE FLASHING BOOT IN ACCORDANCE WITH MANUFACTURER'S RECOMMENDATIONS.

1 VENT THROUGH ROOF
NTS

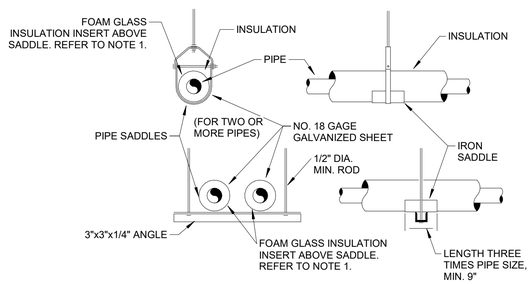

NOTES:

1. INSULATION ABOVE SADDLES SHALL BE FOAM GLASS INSERT OF SAME THICKNESS AS THE SPECIFIED PIPE INSULATION AND COMPRESSIVE STRENGTH OF NOT LESS THAN 3,000 PSI.
2. HANGER RODS SHALL BE OF THE SAME SIZE REQ'D, BUT NOT SMALLER THAN 1/2" DIAMETER.
3. HANGERS ARE ALSO TYP. FOR UNINSULATED PIPING (WITHOUT INSULATION AND SADDLES.)

10 TYPICAL PIPE SUPPORT
NTS

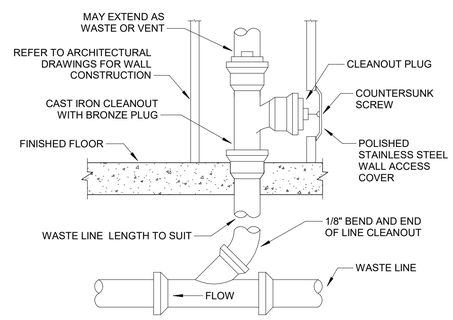

6 WALL CLEANOUT
NTS

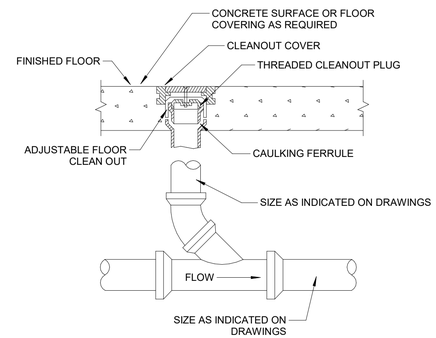

2 FLOOR CLEANOUT (FINISHED AREA)
NTS

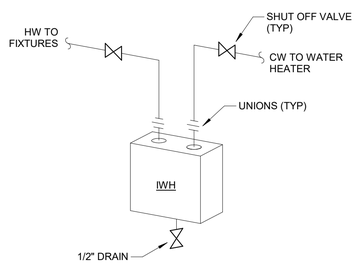

11 INSTANTANEOUS ELEC WATER HEATER
NTS

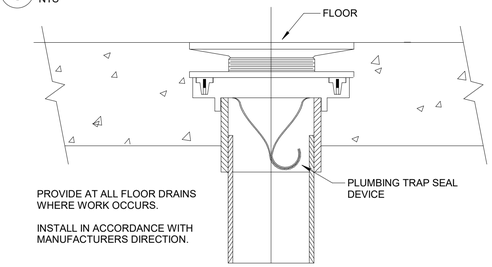

PROVIDE AT ALL FLOOR DRAINS WHERE WORK OCCURS.

INSTALL IN ACCORDANCE WITH MANUFACTURERS DIRECTION.

7 TRAP SEAL GUARD
NTS

NOTE:
USE AT ALL SANITARY AND WASTE CONNECTIONS OF TWO PIPES.

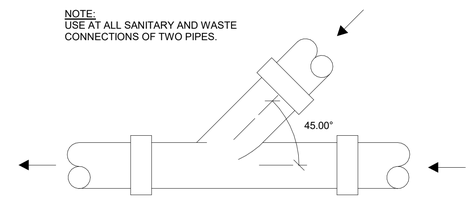

3 TYPICAL WYE CONNECTION
NTS

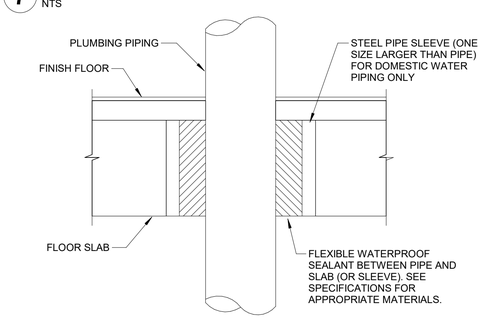

8 PIPE PENETRATION THROUGH FLOOR SLAB
NTS

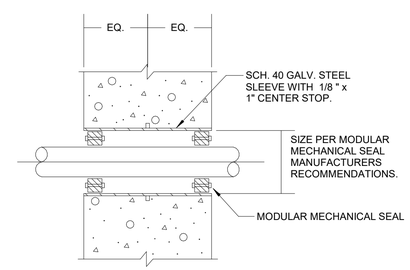

4 FOUNDATION WALL PENETRATION
NTS

powers brown architecture

PROJECT TITLE

AXIUM BTS EXPANSION - ST. PETERS

4001 PREMIER PARKWAY
ST. PETERS, MISSOURI 63301

A PROJECT FOR

PEAK CONSTRUCTION

GENERAL NOTES

CONSULTANT:

SOLUTIONS AEC
OPTIMIZING THE BUILT ENVIRONMENT
10024 Office Center Avenue
Suite 201
St. Louis, MO 63128
(314) 966.6299
© 2026 Solutions AEC, LLC

△	DATE	REVISION
	2026-04-17	PERMIT

PROJECT NO: 267020
DRAWN BY: BTF
CHECKED BY: MBS

SHEET NAME

PLUMBING DETAILS

SEAL

STATE OF MISSOURI
MATTHEW BRIAN SPICER
NUMBER PE-2010000667
PROFESSIONAL ENGINEER
04/17/26
LICENSE EXPIRES 12/31/2026

SHEET NUMBER

P501

COPYRIGHT © 2026 POWERS BROWN ARCHITECTURE. THIS DRAWING AND THE ARCHITECTURAL WORK REPRESENTED HEREIN ARE THE SOLE PROPERTY OF POWERS BROWN ARCHITECTURE. REPRODUCTION OF THIS DRAWING MAY BE EFFECTED ONLY WITH THE EXPRESS WRITTEN CONSENT OF THE ARCHITECT.

Autodesk Docs://1378-25-01 Axium Packaging/1378-25-01 Warehouse Expansion SAEC25.rvt
4/17/2026 10:45:19 AM

PLUMBING FIXTURE SCHEDULE

TYPE MARK	DESCRIPTION	SOIL/WASTE	VENT	CW	HW	FLOW RATE (GPM / GPF)	TYPE COMMENTS	MANUFACTURER	MODEL	TRIM	MODEL	NOTES
EW-1	EMERGENCY EYEWASH	1-1/2"	1-1/2"	1/2"	1/2"	-	WALL-MOUNTED, HANDS-FREE WITH TMV	GUARDIAN	G1814	GUARDIAN	G3600LF	-
FCO-1	FLOOR CLEANOUT	4"	-	-	-	-	EXTRA HEAVY DUTY COVER	ZURN	Z1400	-	-	-
FD-3	FLOOR DRAIN	4"	2"	-	-	-	MECHANICAL ROOM; ADJUSTABLE HEAVY DUTY	ZURN	Z1732	-	-	1
HB-1	HOSE BIBB	-	-	3/4"	-	-	ANTI-SIPHON; NON-FREEZING AREA	WOODFORD	24	-	-	-
RH-1	ROOF HYDRANT	-	-	3/4"	-	-	NON-FREEZE; NON-DRAIN; WITH 50H BACKFLOW	WOODFORD	SRH-MS	-	-	-

NOTES:
1. PROVIDE WITH TRAP SEAL GUARD CONFORMING TO ASSE 1072.

INSTANTANEOUS ELECTRIC WATER HEATER SCHEDULE

EQUIP. TAG	MANUFACTURER	MODEL	WATER TEMPERATURE (°F)	KW INPUT	ELECTRICAL DATA			DISCONNECT		NOTES
					FLA	VOLTAGE	PHASE	FURNISHED BY	INSTALLED BY	
IWH-2	EEMAX	SPEX1812EE	80	1.8	15	120	1	EC	EC	1,2

NOTES:
1. WATER HEATER MUST COMPLY WITH ASHRAE 90.1 REQUIREMENTS AND MEET SCHEDULED PERFORMANCE.
2. PROVIDE WITH 1.6GPM FLOW REGULATOR.

* IF EQUIPMENT WITH VOLTAGE OTHER THAN THAT SCHEDULED IS SUBMITTED, THEN CAPACITY WILL NEED TO BE DERATED TO ACHIEVE THE REQUIRED CAPACITY PER THE SCHEDULE.

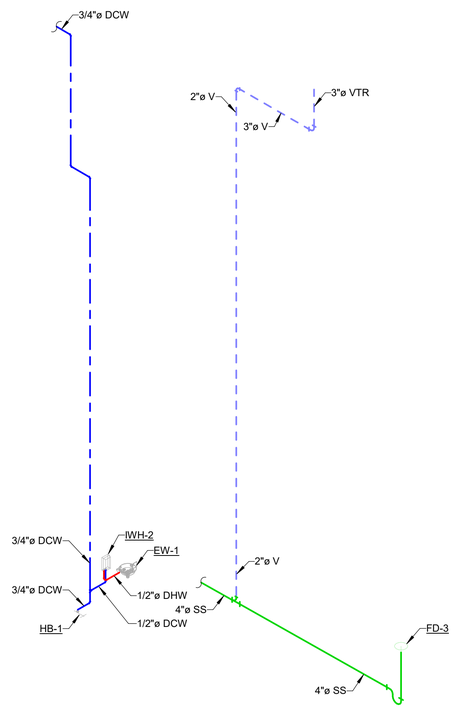

1 PLUMBING ISOMETRIC - MECHANICAL ROOM
NTS

PLUMBING PIPE AND INSULATION SCHEDULE

SERVICE PIPING	LOCATION	PIPE MATERIALS				JOINING METHOD	INSULATION			BARRIER	NOTES
		TEMP. RANGE (°F)	SIZE (IN.)	TYPE / SCHED.	MATERIAL		THICKNESS	TYPE	JACKET		
DOMESTIC COLD WATER	ABOVE FLOOR	≤ 60°F	ALL	"L"	CU	SW/BR/PR	1"	UC OR FG	-/ASJ	Y	1
DOMESTIC COLD WATER	ABOVE FLOOR	≤ 60°F	ALL	40	CPVC	SOL	1"	UC OR FG	-/ASJ	Y	1
DOMESTIC HOT WATER SUPPLY	ABOVE FLOOR	110°F-140°F	< 1.5"	"L"	CU	SW/BR/PR	1"	FG	ASJ	N	-
DOMESTIC HOT WATER SUPPLY	ABOVE FLOOR	110°F-140°F	< 1.5"	40	CPVC	SOL	1"	FG	ASJ	N	-
SANITARY SEWER	ABOVE FLOOR - IN NON-RETURN AIR PLENUM	65°F-75°F	ALL	40	PVC DWV	SOL	-	-	-	-	-
SANITARY SEWER	BELOW GRADE	65°F-75°F	ALL	40	PVC DWV	SOL	-	-	-	-	-
SANITARY VENT	ABOVE FLOOR - IN NON-RETURN AIR PLENUM	65°F-75°F	ALL	40	PVC DWV	SOL	-	-	-	-	-
SANITARY VENT	BELOW GRADE	65°F-75°F	ALL	40	PVC DWV	SOL	-	-	-	-	-

NOTES:
1. FLEXIBLE ELASTOMERIC UNICELLULAR INSULATION DOES NOT REQUIRE JACKET. FIBERGLASS PIPE INSULATION DOES REQUIRE JACKET.

GENERAL NOTES:
A. ALL COLD WATER PIPING SYSTEMS AND COMPONENTS OPERATING AT 60°F OR BELOW SHALL BE INSULATED WITH A VAPOR BARRIER.
B. INSULATE ALL PIPING CONTAINING FLUIDS WARMER THAN 105°F OR COOLER THAN 60°F WITH INSULATION OF R-3 MIN. VALUE.
C. PROVIDE IDENTIFICATION LABELS ON ALL ABOVE FLOOR INDOOR PIPING.
D. FOAM CORE PVC IS NOT ACCEPTABLE.

PIPE SCHEDULE LEGEND:

ASJ	ALL SERVICE JACKET	FG	FIBERGLASS	PR	PRESS (COMPRESSION)
BR	BRAZED	FLG	FLANGED	PVC	POLYVINYL CHLORIDE
CPVC	CHLORINATED PVC	FPE	FLEXIBLE POLYETHYLENE	PW	PLENUM RATED INSULATION WRAP
CRMP	CRIMPED	FW	FUSION WELDED	SCR	SCREWED
CS	CARBON STEEL	GRV	RIGID, GROOVED	SOL	SOLVENT WELD
CG	CELLULAR GLASS	GS	GALVANIZED STEEL	SERV	SERVICE WEIGHT
CI	CAST IRON	HT	HIGH TEMPERATURE	SW	SWEAT
CU	COPPER	HS	HUB & SPIGOT (COMPRESSION GASKET)	THR	THREADED FITTING
CSST	CORRUGATED STAINLESS STEEL	MECH	MECHANICAL	T/S	TYPE OR SCHEDULE
DI	DUCTILE IRON	MGT	COPPER MEDICAL GAS TUBING	UC	FLEXIBLE ELASTOMERIC UNICELLULAR
DWV	DRAIN WASTE VENT	NH	NO-HUB W/ HEAVY DUTY COUPLINGS	WLD	WELDED
EXP	PROPEX EXPANSION	PEX	CROSS LINKED POLYETHYLENE TUBING	Y	YES
FE	FLEXIBLE ELASTOMERIC (NITRILE)	POLY	POLYISOCYANURATE INSULATION	N	NO
FF	FOIL FACED JACKET	PP	POLYPROPYLENE		

powers brown architecture

PROJECT TITLE

AXIUM BTS EXPANSION - ST. PETERS

4001 PREMIER PARKWAY
ST. PETERS, MISSOURI 63301

A PROJECT FOR

PEAK CONSTRUCTION

GENERAL NOTES

CONSULTANT:

SOLUTIONS AEC
OPTIMIZING THE BUILT ENVIRONMENT
10024 Office Center Avenue
Suite 201
St. Louis, MO 63128
(314) 966.6299

© 2026 Solutions AEC, LLC

△	DATE	REVISION
	2026-04-17	PERMIT

PROJECT NO: 267020
DRAWN BY: BTF
CHECKED BY: MBS

SHEET NAME

PLUMBING SCHEDULES

SEAL

STATE OF MISSOURI
MATTHEW BRIAN SPENCER
NUMBER PE-2010000867
PROFESSIONAL ENGINEER
04/17/26
LICENSE EXPIRES 12/31/2026

SHEET NUMBER

P601

COPYRIGHT © 2026 POWERS BROWN ARCHITECTURE THIS DRAWING AND THE ARCHITECTURAL WORK REPRESENTED HEREIN IS THE SOLE PROPERTY OF POWERS BROWN ARCHITECTURE AND IS CONSTRUCTED FOR THE EXPRESS PURPOSE OF THE PROJECT

Autodesk Docs://1378-25-01 Axium Paskaging/1378-25-01 Warehouse Expansion SAEC25.rvt
4/17/2026 10:49:21 AM