Addendum C

Project Name: **LINCOLN COUNTY FIRE PROTECTION DISTRICT, HOUSE NO. 2 BUILDING**

Project Number: **20-1521.00**
Date Issued: **January 3, 2021**

General notes;

1. Addendum C captures all items from the issuance of addendum B to January 3rd at 5:00PM the deadline to submit questions.
2. Extent and location of aluminum site proof should be reviewed per the drawings.
3. Extent of retaining wall from curb to retaining wall currently shown as turf, to be changed to have weed block base and limestone gravel similar to the front of the building.
4. Extent and locations of rip rap to follow civil drawings.
5. Location of wall caps to be designed by retaining wall contractor.

Substitution Requests

1. N/A

RFI's and Responses;

1. *Question: In the telephone system speck section, it calls for providing components for fire house #1. I presume we are to install all of these? Is all the cabling in place for the phones and equipment they are requesting? If not, will they be providing a drawing for the locations, they want the equipment installed at.*
   Response: No cabling in place. Infrastructure will need to be provided by contractor per the specifications. Specs tell contractors to coordinate with owner for installation; no drawings should be required.

2. *Question: Can more information be given for the fire station controller?*
   Response: please verify what information is needed. Drawings show power for system and relays.

3. *Question: Can more information be given on the alert and tone system?*
   Response: please verify what information is needed. Drawings show power for system and relays.

4. *Question: Note 9,10 on sheet E-300 talks about a signal warning light that ties into the overhead door system. Will the garage door company be supplying this item?*
   Response: EC to provide

5. *Question: Can I presume that the IT rack is going to be located within the electrical room?*
   Response: Correct

6. *Question: Who is going to be responsible for installing tone /alarm system and fire house controller?*
   Response: Station Alerting Contractor

7. *Question: Note 11 on sheet E-100 calls for snow melting cabling in concrete. It refers you to the specification's but I cannot find anything in the specs about it.*
   Response: Refer to E-100 for Snow Melt System bid alternate.

8. *Question: One-line/E-002 shows a 150kW genset but Power Plan/E-300 shows 125kW?*
   Response: Previously sent on 12.16. Will resend with this set.

9. *Question: One-line/E-002 keynote #2 specifies a 400A ATS, 600A is shown on the one-line, and 800A is specified in spec section 263600, 2.1, G, 3?*
   Response: Revised to 600A.

10. *Question: Will copper piping and soldered fittings be acceptable for all sizes of gas piping, including concealed spaces? P001 conflicts with P002 requirement of welded steel greater than 2".*
    Response: Revised to wall hung lav 1.

11. *Question: The Soft cold water has conflicting sizing. Overhead and isometric both show 1-1/2" Soft cold leaving the mechanical room. However, down the hallway, it's shown as 2". Please confirm sizing.*
    Response: Revised the soft cold water to the correct size.

12. *Question: Sheet A-401. Detail 1B, note 15, says 'SHOWER – See plumbing specs'. P001, SH-1 Shower Stall says 'See Architectural Plans'….. There are no specs.*
    Response: shower body is a prefab, plumber to provide shower drain, trap, and faucet and tmv. Prefab base and wall BOD is Delta Classic 400 32in x 60in.

13. *Question: Can you call out the BMD elevation on Detail D/S5.1?*
    Response: BMD is at 109.

14. *Question: We wanted to submit an additional RFI regarding the snow melt system that is indicated by note 11 on page E100. Per the note, additional information is contained within division 26 specifications. However, in looking through the specs, we were not able to find any information regarding the snow melt system. At your convenience, would you be able to provide all available information about the snow melt system, such that we can include this in our bid?*
    Response: Refer to revised E-100 for more information.

15. *Question: Does the architect have a preferred attachment method to install the interior metal liner panel? Should install be horizontal or vertical? Vertical requires backing and spacing detail from the architect.*
    Response: Installation should be a vertical, direct fasten system. All fasteners to attach directly into the metal studs.

<u>Specification Changes;</u>

1. N/A

The Sheets with Drawing Changes are as Follows;

1. S2.0 – Foundation Plan
    a. Added detail C/S2.0 to show notch in stem wall at brick finishes.
    b. Removed 'SIM section' call-out on detail B/S2.0.
    c. Updated plan section call-outs to coordinate with new details.

2. S3.1 – Foundation Sections
    a. Removed 'SIM section' call-out on detail E/S3.1

3. S4.2 – Framing Sections
    a. Added Detail Q/S4.2 to show notch in stem wall at brick finishes.

4. P001 -Plumbing Notes and Schedules
    a. Updated plumbing fixture schedule and water supply unit summary

5. P100 – Waste & Vent Plan
    a. Room 115 Lav updated

6. P101- Water and Gas Plan
    a. Room 115 Lav updated

7. P300 – Plumbing Isometrics
    a. Diagram Updated

8. E002 – Power One-line & Panel Schedules
    a. Keyed note 2 updated

9. E100 – Electrical Site Plan
    a. Snow Melt Bid Alternate information added to drawing.

10. E300 – Electrical Power Plan
    a. See plan and updated keyed note 3

Plumbing RFI responses:

1. They will need to use sch 40 blk steel for all gas piping.
2. Sizes of the SW have been corrected.
3. Refer to addendum response above for shower insert.
4. The HR-1 is to be supplied by owner the HR-2 is just a hose bibb connected, I named it HR-2 so that the location of where it will be installed will be by the other HR location.
5. A provided by list has been added to the plumbing fixture schedule.

END OF ADDENDUM C

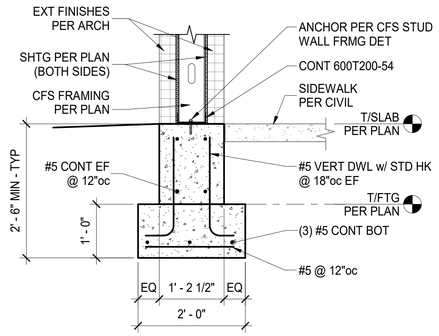

A S2.0 FOUNDATION SECTION
3/4" = 1'-0"

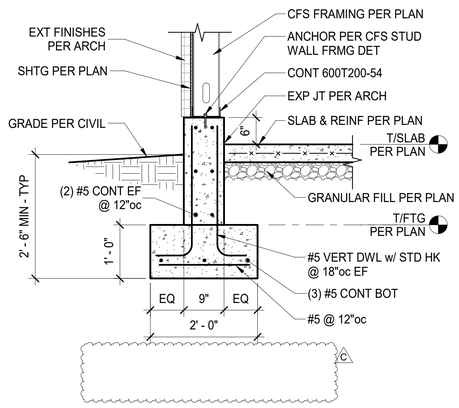

B S2.0 FOUNDATION SECTION
3/4" = 1'-0"

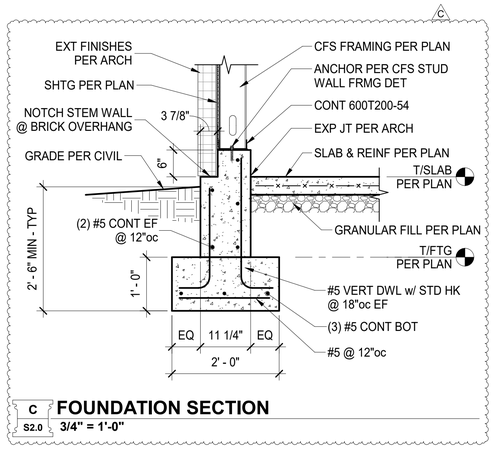

C S2.0 FOUNDATION SECTION
3/4" = 1'-0"

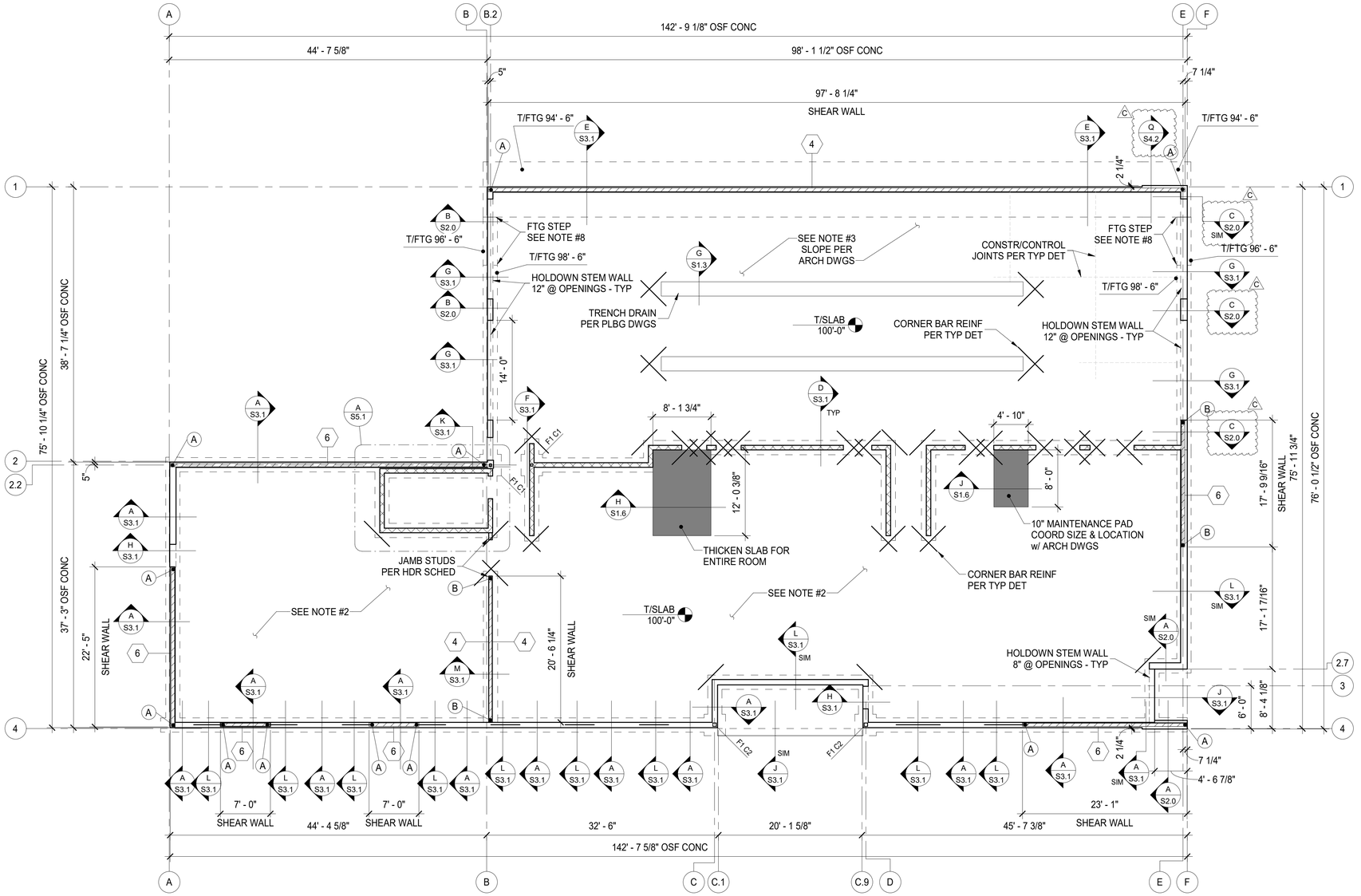

COLUMN SCHEDULE			
MARK	SIZE	BASE PLATE	ANCHOR BOLTS
C1	HSS 4x4x5/16	11" x 8" x 3/4"	(4) 3/4"dia w/ 16" EMBED
C2	HSS 6x6x5/16	SEE SECTION	(4) 3/4"dia w/ 16" EMBED

FOOTING SCHEDULE		
MARK	SIZE	REINFORCING
F1	3' - 0"x3' - 0"x1' - 6"	(5) #5 EW T&B

LEGEND - FOUNDATION PLAN

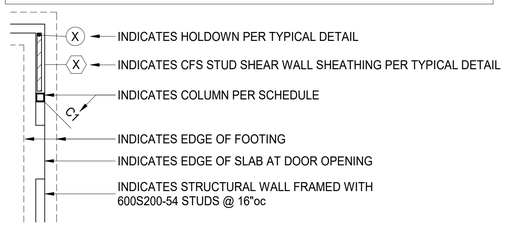

FOUNDATION PLAN

SCALE: 1/8" = 1'-0"

PLAN NOTES

1. SEE SHEETS S1.1 - S1.6 FOR GENERAL NOTES AND TYPICAL DETAILS.
2. 4" CONCRETE SLAB REINFORCED WITH ONE LAYER OF 6x6 - W2.1xW2.1 WWR ON 15 MIL POLY VAPOR BARRIER OVER SPECIALLY PREPARED AND COMPACTED SUBGRADE & SUBBASE PER GEOTECHNICAL REPORT. REINFORCEMENT TO BE LOCATED IN THE MIDDLE OF THE SLAB.
3. 8" CONCRETE SLAB REINFORCED WITH ONE LAYER OF #4 REBAR AT 12" ON CENTER EACH WAY ON 15 MIL POLY VAPOR BARRIER OVER SPECIALLY PREPARED AND COMPACTED SUBGRADE & SUBBASE PER GEOTECHNICAL REPORT. REINFORCEMENT TO BE LOCATED IN THE MIDDLE OF THE SLAB.
4. SEE ARCHITECTURAL DRAWINGS FOR DIMENSIONS, SECTIONS, AND ELEVATIONS NOT SHOWN HEREON.
5. COORDINATE SIZE AND LOCATION OF ROUGH OPENINGS IN FLOOR OR WALLS WITH ARCHITECTURAL DRAWINGS.
6. ALL ELEVATIONS ARE REFERENCED FROM FINISHED MAIN FLOOR = 100'-0"
   - T/FTG = TOP OF FOOTING = 98'-6", UNO.
7. ALL EXTERIOR WALL SHEATHING NOT SPECIFIED AS "SHEAR WALL SHEATHING" IS TO BE 1/2" OSB SHEATHING AND ATTACHED PER IBC TABLE 2304.9.1 UNLESS OTHERWISE INDICATED BY ARCHITECT.
8. FOOTING STEP LOCATIONS (IF SHOWN) ARE GIVEN AS APPROXIMATE. GENERAL CONTRACTOR TO COORDINATE FINAL FOOTING STEP LOCATIONS WITH THE CIVIL DRAWINGS.

JEMA
planning architecture interior design

ARCHITECT
JEMA
2823 OLIVE ST.
ST. LOUIS, MO 63103
CONTACT: MIKE BAARKOVIAK
T: 314-531-7400 EXT 24
E: mbarkoviak@jemastl.com

OWNER
LINCOLN COUNTY FIRE PROTECTION DISTRICT
700 EAST CHERRY STREET
TROY, MO 63379
CONTACT: CHIEF MICHAEL MARLO
T: 314-269-4601
E: mmarlo@lcfpd.org

CONSULTANT
CASE Engineering Inc.
796 Metro Court T 636.349.1600
St. Louis, MO 63026 F 636.349.1730
CERTIFICATE OF AUTHORITY NO. 001498

STATE OF MISSOURI STEPHEN J. SACCO NUMBER PE-21871 PROFESSIONAL ENGINEER
01/03/2022

LINCOLN COUNTY FIRE - STATION #2
675 HWY C, MOSCOW MILLS, MO 63362

PERMIT - BID
12/8/2021

REVISIONS

NO.	DATE	DESCRIPTION
B	12/30/2021	ADDENDUM B
C	1/3/2022	ADDENDUM C

PLAN NORTH 180.00°
TRUE NORTH 145.00°

PROJECT NO. JEM-MO-04-21
ISSUED BY: JEMA
ISSUED DATE: 1/3/2022 4:51:24 PM
SHEET TITLE: FOUNDATION PLAN

S2.0

engineer: DLC & drawn: WJV

Copyright 2020 © JEMA

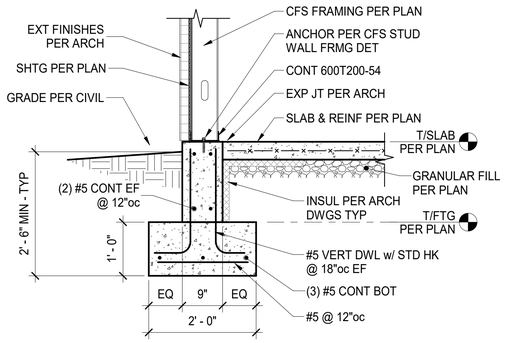

A S3.1 **FOUNDATION SECTION**
3/4" = 1'-0"

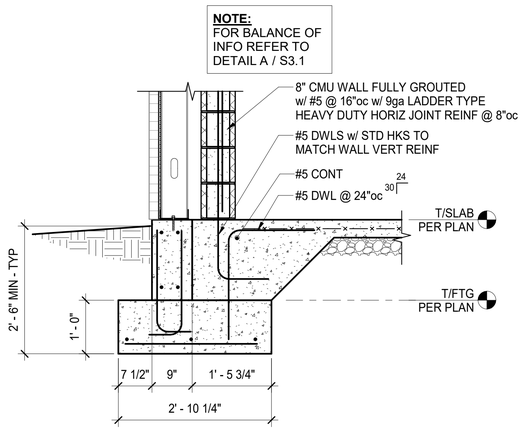

B S3.1 **FOUNDATION SECTION**
3/4" = 1'-0"

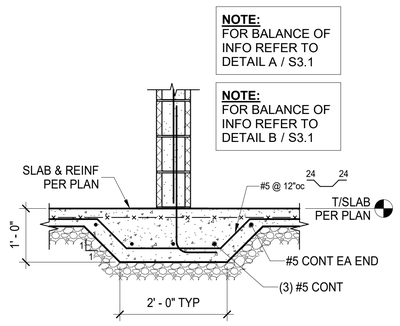

C S3.1 **FOUNDATION SECTION**
3/4" = 1'-0"

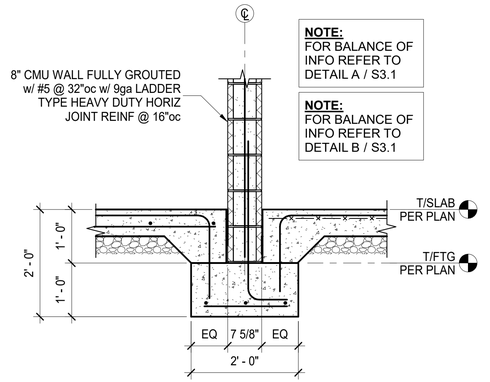

D S3.1 **FOUNDATION SECTION**
3/4" = 1'-0"

E S3.1 **FOUNDATION SECTION**
3/4" = 1'-0"

F S3.1 **FOUNDATION SECTION**
3/4" = 1'-0"

G S3.1 **FOUNDATION SECTION**
3/4" = 1'-0"

H S3.1 **FOUNDATION SECTION**
3/4" = 1'-0"

J S3.1 **FOUNDATION SECTION**
3/4" = 1'-0"

K S3.1 **FOUNDATION SECTION**
3/4" = 1'-0"

L S3.1 **FOUNDATION SECTION**
3/4" = 1'-0"

M S3.1 **FOUNDATION SECTION**
3/4" = 1'-0"

JEMA
planning architecture interior design

ARCHITECT
JEMA
2823 OLIVE ST.
ST. LOUIS, MO 63103
CONTACT: MIKE BAARKOVIAK
T: 314-531-7400 EXT 24
E: mbarkoviak@jemastl.com

OWNER
LINCOLN COUNTY FIRE PROTECTION DISTRICT
700 EAST CHERRY STREET
TROY, MO 63379
CONTACT: CHIEF MICHAEL MARLO
T: 314-269-4601
E: mmarlo@lcfpd.org

CONSULTANT
CASE Engineering Inc.
796 Metro Court T 636.349.1600
St. Louis, MO 63026 F 636.349.1730
CERTIFICATE OF AUTHORITY NO. 001498

STATE OF MISSOURI
STEPHEN J. SACCO
NUMBER PE-21871
PROFESSIONAL ENGINEER
01/03/2022

LINCOLN COUNTY FIRE - STATION #2

675 HWY C, MOSCOW MILLS, MO 63362

PERMIT - BID
12/8/2021

REVISIONS

NO.	DATE	DESCRIPTION
B	12/30/2021	ADDENDUM B
C	1/3/2022	ADDENDUM C

PROJECT NO. JEM-MO-04-21
ISSUED BY: JEMA
ISSUED DATE: 1/3/2022 4:51:25 PM
SHEET TITLE: FOUNDATION SECTIONS

S3.1

engineer: DLC & drawn: WJV

Copyright 2020 © JEMA

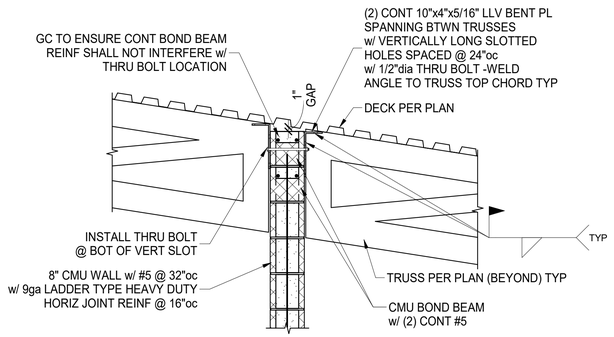

L S4.2 **FRAMING SECTION**
3/4" = 1'-0"

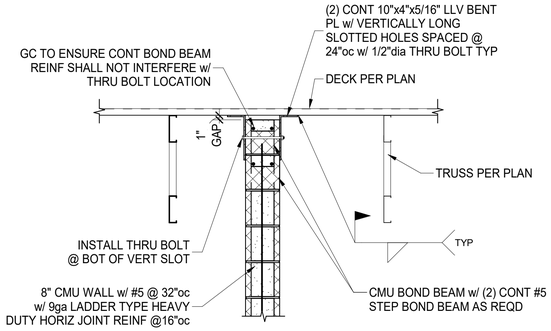

M S4.2 **FRAMING SECTION**
3/4" = 1'-0"

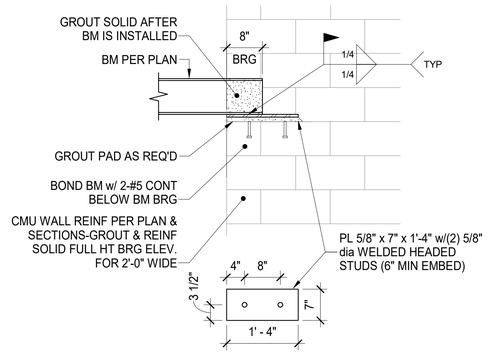

N S4.2 **TYP BEAM BRG ON CMU PARALLEL**
N.T.S.

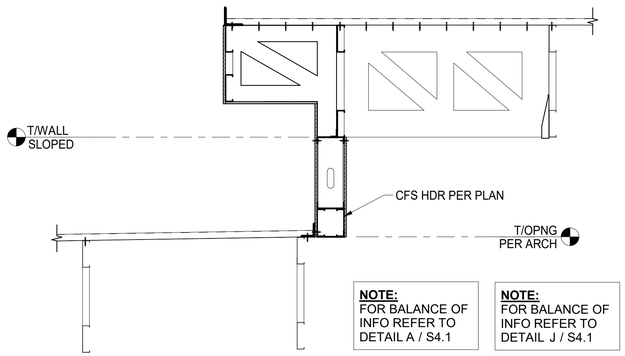

NOTE: FOR BALANCE OF INFO REFER TO DETAIL A / S4.1

NOTE: FOR BALANCE OF INFO REFER TO DETAIL J / S4.1

P S4.2 **FRAMING SECTION**
3/4" = 1'-0"

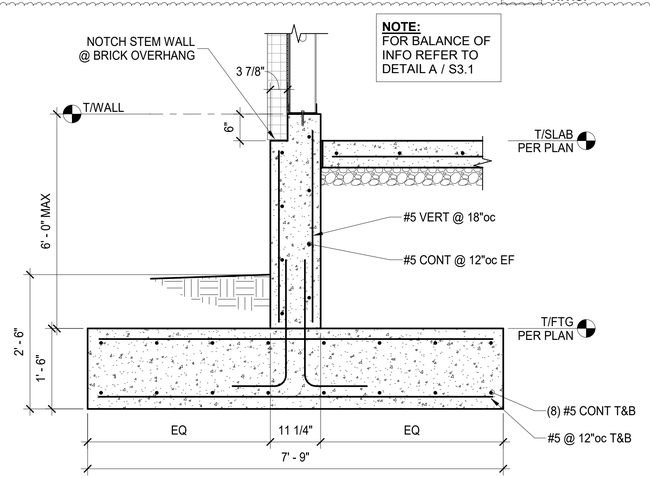

NOTE: FOR BALANCE OF INFO REFER TO DETAIL A / S3.1

Q S4.2 **FOUNDATION SECTION**
3/4" = 1'-0"

JEMA
planning architecture interior design

ARCHITECT
JEMA
2823 OLIVE ST.
ST. LOUIS, MO 63103
CONTACT: MIKE BAARKOVIAK
T: 314-531-7400 EXT 24
E: mbarkoviak@jemastl.com

OWNER
LINCOLN COUNTY FIRE PROTECTION DISTRICT
700 EAST CHERRY STREET
TROY, MO 63379
CONTACT: CHIEF MICHAEL MARLO
T: 314-269-4601
E: mmarlo@lcfpd.org

CONSULTANT
CASE Engineering Inc.
796 Metro Court T 636.349.1600
St. Louis, MO 63026 F 636.349.1730
CERTIFICATE OF AUTHORITY NO. 001498

STATE OF MISSOURI
STEPHEN J. SACCO
NUMBER PE-21871
PROFESSIONAL ENGINEER

01/03/2022

LINCOLN COUNTY FIRE - STATION #2

675 HWY C, MOSCOW MILLS, MO 63362

PERMIT - BID
12/8/2021

REVISIONS

NO.	DATE	DESCRIPTION
C	1/3/2022	ADDENDUM C

PROJECT NO. JEM-MO-04-21
ISSUED BY: JEMA
ISSUED DATE: 1/3/2022 4:51:27 PM
SHEET TITLE: **FRAMING SECTIONS**

S4.2

engineer: DLC & drawn: WJV

Copyright 2020 © JEMA

PLUMBING ABBREVIATION

AD	AREA DRAIN
A.F.F	ABOVE FINISHED FLOOR
BT	BATHTUB
CO	CLEANOUT
COTG	CLEANOUT TO GRADE
CW	COLD WATER
DCVA	DOUBLE CHECK VALVE ASSEMBLY
DWH	DOMESTIC WATER HEATER
ESP	ELEVATOR SUMP PUMP
ETR	EXISTING TO REMAIN
EWC	ELECTRIC WATER COOLER
FCO	FLOOR CLEANOUT
FD	FLOOR DRAIN
F.F.	FINISH FLOOR
HB	HOSE BIB
HW	HOT WATER
HWR	HOT WATER RETURN
HWRP	HOT WATER RECIRCULATING PUMP
HY	HYDRANT
IMB	ICE MAKER BOX
INV. EL	INVERT ELEVATION
LAV	LAVATORY
MB	MOB BASIN
NG	NATURAL GAS
RPBP	REDUCED PRESSURE BACKFLOW PREVENTOR
SH	SHOWER
SK	SINK
SS	SANITARY STACK
ST	STORM
TYP.	TYPICAL
V	VENT
VS	VENT STACK
VTR	VENT THRU ROOF
W	WASTE
WS	WASTE STACK
WB	WASHER BOX
WCO	WALL CLEANOUT
WC	WATER CLOSET
WH	WALL HYDRANT
WHP	WATER HEATER PAN
WSP	WASHER SAFE PAN

PIPING LEGEND

F — FIRE LINE

FLOW SWTICH

SHUTOFF VALVE

CHECK VALVE

BALANCING VALVE

UNION

STRAINER

THERMOMETER

GAUGE

PRESSURE/TEMPERATURE TEST PLUG

CW	COLD WATER
HW	HOT WATER
HWR	HOT WATER RETURN
FW	FILTERED COLD WATER
SW	SOFT COLD WATER
W/S	WASTE/SANITARY
V	VENT
CA	COMPRESSED AIR
ST	STORM
CO	CLEANOUT
FCO	FLOOR CLEANOUT
WCO	WALL CLEANOUT
HY	HYDRANT
	ELBOW, TURNED UP
	ELBOW, TURNED DOWN
	BRANCH CONNECTION, TOP
	BRANCH CONNECTION, BOTTOM
	PIPE CAP OR BLIND FLANGE
	CONNECT TO EXISTING

NOT ALL OF THE ITEMS ABOVE ARE IN THIS PROJECT

PLUMBING FIXTURE SCHEDULE

Mark	Description	Provided By	Manufacturer	Model	Cold Water Pipe	Hot Water Pipe	Waste Pipe	Vent Pipe	Accessory Manufacturer	Accessory Model	Remarks
BP-1	BOOSTER PUMP	GC	FRANKLIN ELECTRIC	2IL-23033-G1S-C	3"	0"	0"	0"			BOOSTER PUMP TO BOOST A MIN OF 40 PSI TO BRING THE PRESSURE TO 60 PSI PRIOR TO WATER SOFTNER. 208V, 3"GROVE, 4.8 GAL TANK, 2 PUMPS, PRESSURE TANK, PRESSURE SWITCH AND GAUGE, CHECK VALVE AND INLINE BY PASS.PROVIDE TRANSFORMER 305619014 PROVIDE WATER SHEILD AS NEEDED.
C-1	AIR COMPRESSOR	GC	INGERSOLL	2475N5	0"	0"	0"	0"			5 HP, 2 STAGE,200v 3PHASE, 3/4" INLET/OUTLET, VERTICAL, 80 GAL TANK, 16.8 CFM, PROVIDE START UP KIT.
DW-1	DISHWASHER	GC	GE	SEE ARCHITECHUAL PLANS	0"	1/2"	2"	0"			PROVIDE SHUT OFF VALVE AND TO DRAIN INDIRECTLY TO KITCHEN SINK PER CODE.
EW-1	EYEWASH - SHOWER COMBO	GC	GUARDIAN	G1902P	1/2"	1/2"	1 1/4"	1 1/2"			SAFETY STATION WITH EYEWASH, PLASTIC BOWL. AND TEMPERED WATER MIXING VALVE.
EWC-1	WATER COOLER	GC	ELKAY	LZS8WSLK	1/2"	0"	2"	1 1/2"			BOTTLE FILLING STATION WITH SINGLE ADA COOLER
FW-1	FILTERED WATER SYSTEM	GC	CULLIGAN	CB1AGSR7	1/2"	0"	0"	0"			PROVIDE CHECK VALVE PRIOR TO FILTERED WATER SYSTEM.1.7 GPM
FW-2	CHILLED WATER SYSTEM	GC	ELKAY	EC1100	1/2"	0"	0"	0"	ELKAY	CWT100	PROVIDE CHECK VALVE AND SHUT OFF VALVE PRIOR TO EQUIPMENT.
GG	GAS GRILL (OUTSIDE)	GC	WEBER	GENESIS 2 E-435	0"	0"	0"	0"			NATURAL GAS GRILL, PROVIDE OUTLET BOX BURNABY VGP-EXT-75 VERIFY GAS GRILL BTU.
GWH-1	TANKLESS WATER HEATER	GC	AO SMITH	540H	0"	0"	0"	0"			100 F RISE, 199 MBH, 120 V SINGLE PHASE. INTAKE/EXHAUST VENT TO BE ROUTED TO THE OUTSIDE 10FT FROM INTAKE EQUIPMENT OR DOORS.
GWH-2	TANKLESS WATER HEATER	GC	AO SMITH	540H	0"	0"	0"	0"			100 F RISE, 199 MBH, 120 V SINGLE PHASE.INTAKE/EXHAUST VENT TO BE ROUTED TO THE OUTSIDE 10FT FROM INTAKE EQUIPMENT OR DOORS.
HB-1	HOSE BIBB	GC	WOODFORD	86	3/4"	0"	0"	0"			WITH FREEZE PROOF BOX
HR-1	HOSE REEL - TRUCK TOP OFF	OWNER	-	-	1"	0"	0"	0"			PROVIDED BY OWNER INSTALLED BY GC
HR-2	HOSE BIBB	GC	WOODFORD	86	3/4"	0"	0"	0"			
LAV-1	LAVATORY - WALL HUNG - ADA	GC	KOHLER	K-2035-1	1/2"	1/2"	2"	1 1/2"	DELTA	559LF	PROVIDE DRAIN, TRAP, ANGLE STOPS AND TMV SET TO 105F.
LAV-2	LAVATORY - DROP IN	GC	TBD	LUCERNE	1/2"	1/2"	2"	1 1/2"	DELTA	559LF	PROVIDE DRAIN, TRAP, ANGLE STOPS AND TMV SET TO 105F.
MS-1	MOP SINK	GC	FIAT	MSB-2424	3/4"	3/4"	3"	2"	T&S BRASS	897-CP	WALL MOUNTED FAUCET WITH BUCKET HOLDER. PROVIDE MOP HANGER WALL BRAKETS.
OB-1	FUTURE ICE MAKER OUTLET BOX	GC	SIOUX CHIEF	696-RG1010MF	1/2"	0"	0"	0"			WITH MINI ARRESTOR
OB-2	COFFEE/ICE MAKER OUTLET BOX	GC	SIOUX CHIEF	696-RG1010MF	1/2"	0"	0"	0"			WITH MINI ARRESTOR
OB-3	WASHING MACHINE OUTLET BOX	GC	SIOUX CHIEF	696-R2313MF	1/2"	1/2"	2"	2"			WITH MINI ARRESTOR
RCP-1	HOT WATER RECIRCULATION PUMP	GC	GRUNDFOS	ALPHA2	0"	0"	0"	0"			5 GPM, 12" HEAD PRESSURE, 45 WATTS, 120V/1 PROVIDE AQUA STAT
S-1	SINGLE BOWL SINK WITH GARBAGE DISPOSAL	GC	ELKAY	EFRU311610TFC	1/2"	1/2"	2"	2"	ELKAY	LKAV2061CR	GARBAGE DISPOSAL ELKAY PRO880LT, PROVIDE ANGLE STOPS, DRAINS, AND TMV SET TO 105.
S-2	1-COMPARTMENT SINK	GC	SEE ARCHITECHUAL PLANS	SEE ARCHITECHUAL PLANS	1/2"	1/2"	2"	2"	-	-	PROVIDE DRAIN, TRAP, ANGLE STOPS AND TMV SET TO 105F.PROVIDE PULL DOWN FAUCET DECK MOUNTED.
SH-1	SHOWER STALL	GC	SEE ARCHITECHUAL PLANS	SEE ARCHITECHUAL PLANS	1/2"	1/2"	2"	1 1/2"	DELTA	T17230	PROVIDE SHOWER DRAIN ,TRAP AND A TMV SET TO 110 MAX.
WC-1	WATER CLOSET - FLOOR - FLUSH TANK- ADA	GC	TOTO	CST243EF	1/2"	0"	4"	2"	TANK TYPE		TANK TOILET,SS113 SOFT CLOSE SEAT, TRIP LEVER TO BE LOCATED ON APPROACH SIDE. 1.28 GPF.
WC-2	WATER CLOSET - FLOOR - FLUSH TANK	GC	TOTO	CST243EF	1/2"	0"	4"	2"	TANK TYPE		TANK TOILET, SS113 SOFT CLOSE SEAT, TRIP LEVER TO BE LOCATED ON APPROACH SIDE. 1.28 GPF.
WS-1	WATER SOFTNER SYSTEM	GC	CULLIGAN	CTM-90	2"	0"	1 1/2"	0"			57 GPM @ 15 PSI DROP. MIN INLET PRESSURE 35 PSI, 120V SINGLE PHASE. WITH BRINE TANK. PROVIDE WATER BY PASS AND CHECK VALVES. INSTALL PER MANUFACTUERS INSTRUCTIONS.

1

FUEL LOADS SUMMARY

BUILDING NATURAL GAS SERVICE = 1" LINE 30 PSI REGULATED TO 2 PSI BEFORE METER
DEVELOPED LENGTH = 250'-0"
CONTRACTOR TO REGULATE TO 7.5 W.C BEFORE ENTERING BUILDING WITH SEISMIC SHUT OFF
TOTAL LOAD = 1,310 MBH
PIPE SIZE @ 7.5 W.C. = 3"

MARK	DESCRIPTION	Count	FUEL INPUT (MBH)
GWH-1	TANKLESS WATER HEATER	1	200
GWH-1	TANKLESS WATER HEATER	1	200
GWH-2	TANKLESS WATER HEATER	1	200
RTU-1	ROOF TOP UNIT	1	180
TRH-1	RADIENT HEATER	1	125
TRH-1	RADIENT HEATER	1	125
GG	GAS GRILL (OUTSIDE)	1	240

DRAINAGE FIXTURE UNIT SUMMARY

ID	FIXTURE DESCRIPTION	QTY	WASTE SIZE	DFU DEMAND UNIT	DFU DEMAND TOTAL
EW-1	EYEWASH - SHOWER COMBO	1	1 1/4"	2	2
EWC-1	WATER COOLER	2	1 1/2"	0.5	1
FD-1	FLOOR DRAIN	1	2"	2	2
FD-1	FLOOR DRAIN	7	3"	6	42
FS-1	FLOOR SINK	1	3"	4	4
LAV-1	LAVATORY - WALL HUNG - ADA	2	2"	1	2
LAV-2	LAVATORY - DROP IN	3	1 1/2"	1	3
MS-1	MOP SINK	1	3"	2	2
OB-3	WASHING MACHINE OUTLET BOX	2	2"	3	6
S-1	SINGLE BOWL SINK WITH GARBAGE DISPOSAL	1	2"	2	2
S-2	1-COMPARTMENT SINK	1	2"	4	4
SH-1	SHOWER STALL	4	2"	2	8
WC-1	WATER CLOSET - FLOOR - FLUSH TANK- ADA	1	3"	4	4
WC-2	WATER CLOSET - FLOOR - FLUSH TANK	4	3"	4	16
Grand total: 31					98

1

WATER SUPPLY FIXTURE UNIT SUMMARY

BUILDING WATER CONDITIONS
BUILDING DOMESTIC WATER SUPPLY SIZE = 3"
BUILDING STATIC WATER PRESSURE = 45 PSI

BUILDING PRESSURE LOSS
METER, STRAINER, RPZ, LOSS = 25 PSI
WATER SOFTNER = 15 PSI
LOWEST PRESSURE REQUIRED = 20 PSI
TOTAL PRESSURE LOSS = 60 PSI
45 PSI - 60 PSI = -15 PSI
TOTAL BOOST REQUIRED IS 40 PSI.

TOTAL BUILDING LOAD
61 GPM WITH TANKS @ 4 FPS = MIN 3"

ID	FIXTURE DESCRIPTION	QTY	CWFU DEMAND UNIT	CWFU DEMAND TOTAL	HWFU DEMAND UNIT	HWFU DEMAND TOTAL	WSFU DEMAND UNIT	WSFU DEMAND TOTAL
DW-1	DISHWASHER	1	0	0	1.5	1.5	1.5	1.5
EW-1	EYEWASH - SHOWER COMBO	1	0	0	1.5	1.5	2	2
EWC-1	WATER COOLER	2	0.5	1	0	0	0.5	1
FW-2	CHILLED WATER SYSTEM	1	0.25	0.25	0	0	0.25	0.25
HB-1	HOSE BIBB	3	2.5	7.5	0	0	2.5	7.5
HR-1	HOSE REEL - TRUCK TOP OFF	1	75	75	0	0	75	75
HR-2	HOSE BIBB	1	35	35	0	0	35	35
LAV-1	LAVATORY - WALL HUNG - ADA	2	1.5	3	1.5	3	2	4
LAV-2	LAVATORY - DROP IN	3	0.75	2.25	0.75	2.25	1	3
MS-1	MOP SINK	1	2.25	2.25	2.25	2.25	3	3
OB-1	FUTURE ICE MAKER OUTLET BOX	1	0.5	0.5	0	0	0.5	0.5
OB-2	COFFEE/ICE MAKER OUTLET BOX	4	0.5	2	0	0	0.5	2
OB-3	WASHING MACHINE OUTLET BOX	2	3	6	3	6	4	8
S-1	SINGLE BOWL SINK WITH GARBAGE DISPOSAL	1	1.5	1.5	1.5	1.5	2	2
S-2	1-COMPARTMENT SINK	1	1.5	1.5	1.5	1.5	2	2
SH-1	SHOWER STALL	4	1.5	6	1.5	6	2	8
WC-1	WATER CLOSET - FLOOR - FLUSH TANK- ADA	1	5	5	0	0	5	5
WC-2	WATER CLOSET - FLOOR - FLUSH TANK	4	5	20	0	0	5	20
TOTAL				168.75		25.5		179.75

PIPE MATERIAL

SYSTEM	MATERIAL
CONDENSATE	COPPER, PVC
CONDENSER WATER	COPPER TUBING, STAINLESS STEEL, SCHEDULE 80 STEEL
DOMESTIC WATER	PVC, CPVC, COPPER, PEX-A
FIRE PROTECTION	GALVANIZED OR BLACK STEEL
HYDRONIC	COPPER TUBING, STAINLESS STEEL, SCHEDULE 40 STEEL
NATURAL GAS	SCHEDULE 40 BLACK STEEL
REFRIGERANT	ACR COPPER OR SCHEDULE 40 BLACK STEEL
SANITARY VENT	CAST IRON, ABS, PVC
SANITARY WASTE	CAST IRON, ABS, PVC
STORM DRAINAGE	CAST IRON, ABS, PVC

1

PLUMBING DRAIN SCHEDULE

Identity Type Mark	Description	Manufacturer	Model	Remarks
FS-1	FLOOR SINK	JR SMITH	3001	CAST IRON
FD-1	FLOOR DRAIN	WATTS	FD-1100-M	CAST IRON, PROVIDE TRAP PRIMER OR TRAP SEAL.
TD-1	TRENCH DRAIN	MIFAB	T-1400-4-PB4	6" WIDE, PRESLOPED POLYPROPYLENE TRENCH DRAIN BODY, WITH HEAVY DUTY DUCTILE IRON GRATE LOAD CLASS E, 3' CENTER OUTLET, WITH CATCH BASIN.

1

JEMA
planning architecture interior design

ARCHITECT
JEMA
2823 OLIVE ST.
ST. LOUIS, MO 63103
CONTACT: MICHAEL BARKOVIAK
T: 314.531.7400 X24
E: mbarkoviak@jemastl.com

OWNER
LINCOLN COUNTY FIRE PROTECTION DISTRICT
700 EAST CHERRY STREET
TROY, MO 63379
CONTACT: CHIEF MICHAEL MARLO
T: 314.269.4601
E: mmarlo@lcfpd1.org

GENERAL CONTRACTOR
TBD
TBD
TBD
CONTACT: TBD
T: TBD
E: TBD

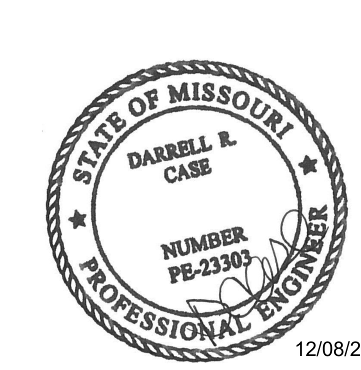

12/08/2021

LINCOLN COUNTY FIRE - STATION #2

675 HWY. C, MOSCOW MILLS, MO

PERMIT & BID

12/08/21

REVISIONS

NO.	DATE	DESCRIPTION
1	01/03/22	Addendum C

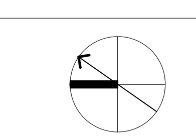

PLAN NORTH 180.00°
TRUE NORTH 145.00°

PROJECT NO. 20-1521.00
ISSUED BY: JEMA
ISSUED DATE: 1/3/2022 2:10:10 PM
SHEET TITLE:

PLUMBING NOTES & SCHEDULES

P001

Copyright 2020 © JEMA

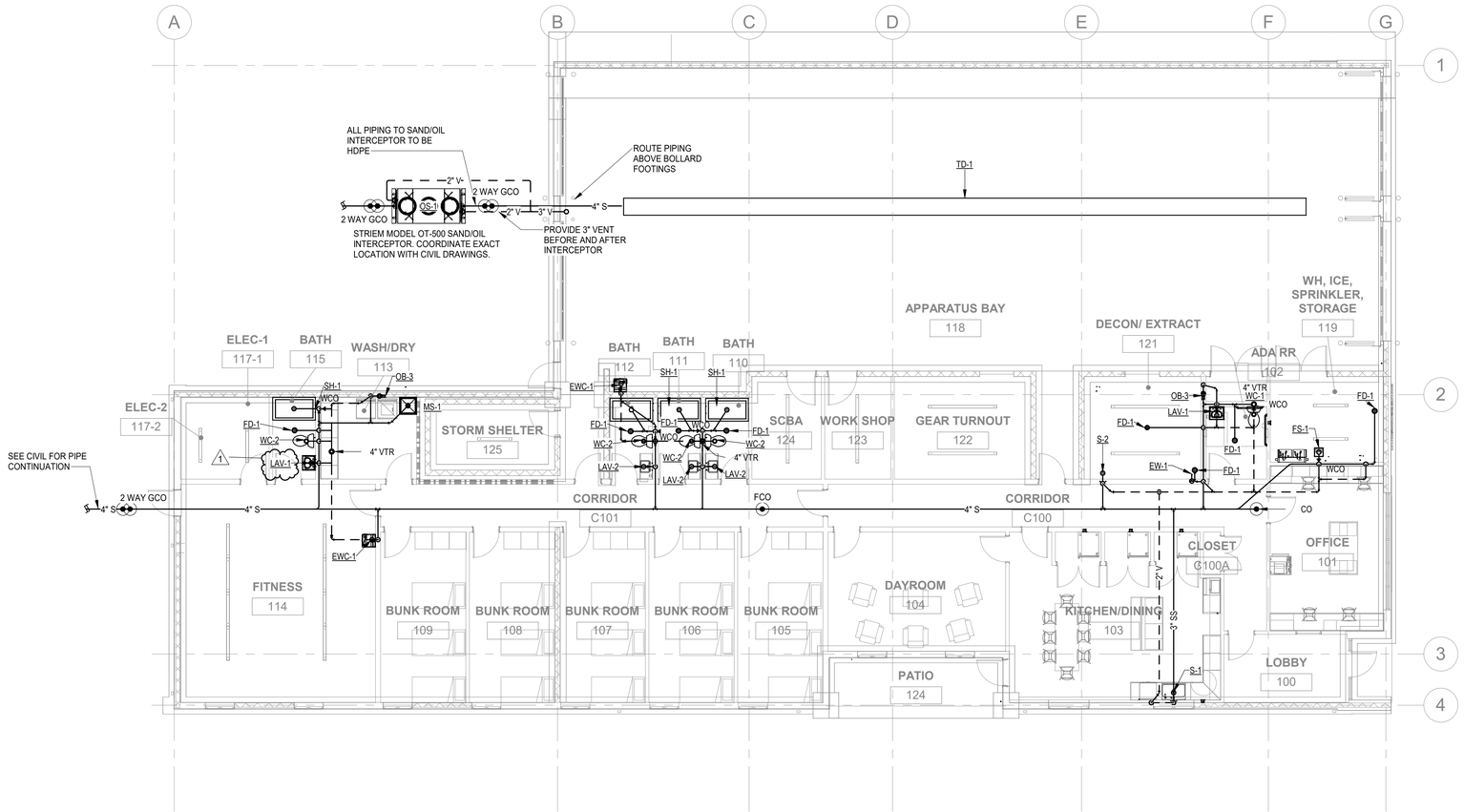

1 P100 WASTE & VENT PLUMBING PLAN

SCALE: 1/8" = 1'-0"

JEMA
planning architecture interior design

ARCHITECT
JEMA
2823 OLIVE ST.
ST. LOUIS, MO 63103
CONTACT: MICHAEL BARKOVIAK
T: 314.531.7400 X24
E: mbarkoviak@jemastl.com

OWNER
LINCOLN COUNTY FIRE PROTECTION DISTRICT
700 EAST CHERRY STREET
TROY, MO 63379
CONTACT: CHIEF MICHAEL MARLO
T: 314.269.4601
E: mmarlo@lcfpd1.org

GENERAL CONTRACTOR
TBD
TBD
TBD
CONTACT: TBD
T: TBD
E: TBD

STATE OF MISSOURI
DARRELL R. CASE
NUMBER PE-23303
PROFESSIONAL ENGINEER

12/08/2021

LINCOLN COUNTY FIRE - STATION #2

675 HWY. C, MOSCOW MILLS, MO

PERMIT & BID
12/08/21

REVISIONS

NO.	DATE	DESCRIPTION
1	01/03/22	Addendum C

PLAN NORTH 180.00°
TRUE NORTH 145.00°

PROJECT NO: 20-1521.00
ISSUED BY: JEMA
ISSUED DATE: 1/3/2022 2:10:11 PM
SHEET TITLE: WASTE & VENT PLAN

P100

Copyright 2020 © JEMA

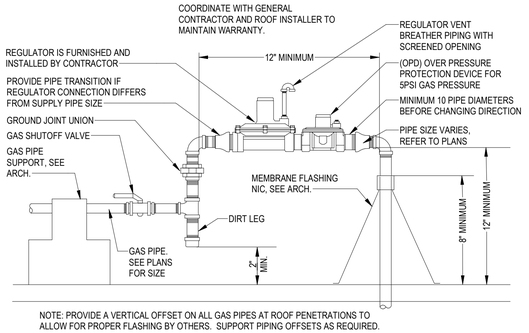

NOTE: PROVIDE A VERTICAL OFFSET ON ALL GAS PIPES AT ROOF PENETRATIONS TO ALLOW FOR PROPER FLASHING BY OTHERS. SUPPORT PIPING OFFSETS AS REQUIRED.

2 P101 GAS PIPE ROOF PENETRATION DETAIL

SCALE: 1/8" = 1'-0"

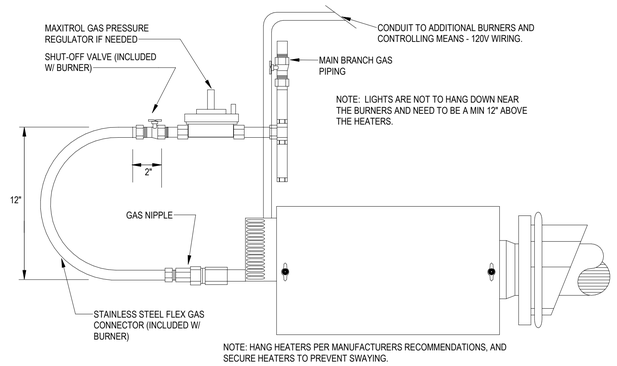

NOTE: HANG HEATERS PER MANUFACTURERS RECOMMENDATIONS, AND SECURE HEATERS TO PREVENT SWAYING.

3 P101 GAS HEATER DETAIL

SCALE: NO SCALE

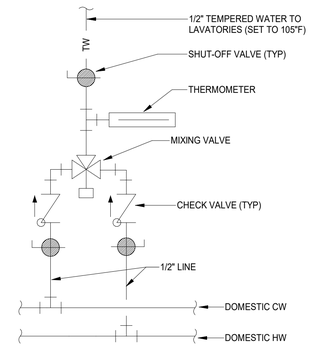

4 P101 TEMPERING VALVE DETAIL

SCALE: 1/8" = 1'-0"

KEYNOTES

1. PROVIDE POINT OF USE MIXING VALVE MV-1 TO PROVIDE 105 DEG. MAX TEMP. WATER
2. PROVIDE BYPASS FOR BOOSTER PUMP. INSTALL PER MANUFACTUERS INSTRUCTIONS.
3. INSTALL FOR FUTURE ICE MACHINE, CONNECT TO FILTERED WATER.
4. INSTALL FOR EXTRACTOR VERIFY EQUIPMENT REQUIREMENTS PRIOR TO INSTALLATION.
5. CONTRACTOR TO INSTALL NATURAL GAS SOLENOID VALVE TO SHUT OFF THE GAS LINE TO KITCHEN EQUIPMENT WHEN FIRE ALARM AND FIRE ALARM CALL IS ACTIVATED. PROVIDE A PUSH BUTTON CONTROLLER (ISIMET) BY EQUIPMENT THAT WILL ACT AS AN EMERGENCY SHUT OFF AND VALVE RESET. THIS IS TO ENSURE GAS COOKING APPLIANCES TO BE SHUT OFF WHEN FIRE ALARM IS ACTIVATED AND WILL ALLOW MANUAL RESET IF COOK WILL NOT NEED TO GO TO FIRE ALARM CALL. COORDINATE INSTALLATION AND CONTROLS WITH ELECTRICAL AND FIRE ALARM CONTRACTOR.
6. INSTALL AIR COMPRESSOR PER MANUFACTURERS INSTRUCTIONS AND SIZE PIPING PER CODE.
7. PROVIDE PULL DOWN COMPRESSED AIR HOSE REEL ABOVE AND CENTERED ON WORK BENCH. PROVISED PUSH CONNECTION NUB.
8. PROVIDE PULL DOWN COMPRESSED AIR HOSE REEL AND PUSH CONNECT NUB. INSTALL PER MANUFACTURERS INSTRUCTIONS.
9. CONTRACTOR TO INSTALL OWNER PROVIDED HOSE REEL.
10. CONTRACTOR TO INSTALL FREEZE PROOF HOSE BIBB FOR FUTURE CONNECTION TO PRESSURE WASHER.
11. CONTRACTOR TO INSTALL NATURAL GAS SOLENOID VALVE TO SHUT OFF THE GAS LINE TO KITCHEN EQUIPMENT WHEN FIRE ALARM AND FIRE ALARM CALL IS ACTIVATED. PROVIDE A PUSH BUTTON BY EQUIPMENT THAT WILL ACT AS AN EMERGENCY SHUT OFF AND VALVE RESET. THIS IS TO ENSURE GAS COOKING APPLIANCES TO BE SHUT OFF WHEN FIRE ALARM IS ACTIVATED AND WILL ALLOW MANUAL RESET IF COOK WILL NOT NEED TO GO TO FIRE ALARM CALL. COORDINATE INSTALLATION AND CONTROLS WITH ELECTRICAL AND FIRE ALARM CONTRACTOR.
1. PROVIDE FLEX CONNECT IN WALL BOX FOR FUTURE OUTSIDE GRILL.
12. FILTERED WATER IS TO SERVE ICE MACHINES, COFFEE MAKERS, AND CHILLED WATER FAUCET BY SINK.

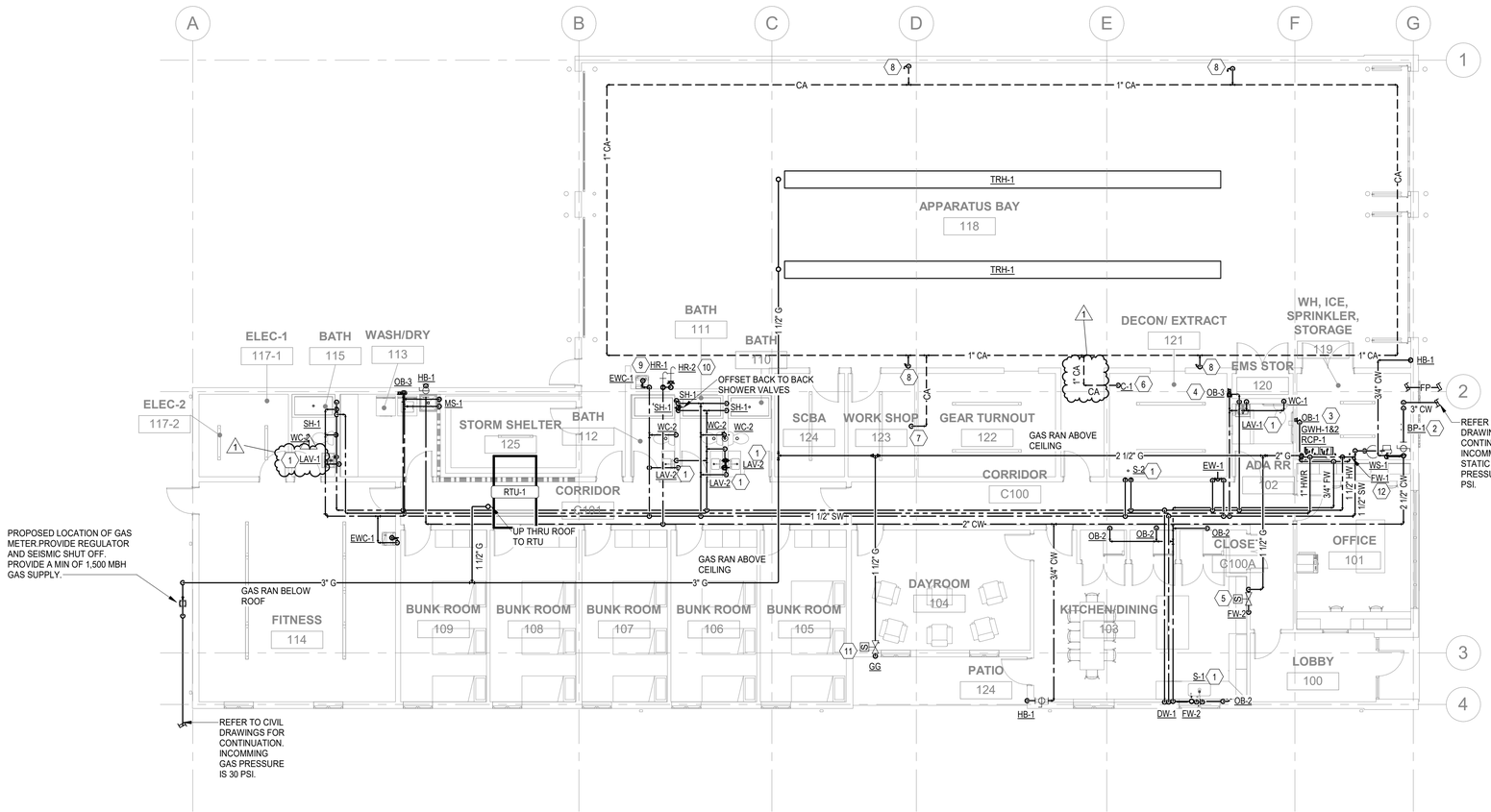

1 P101 WATER & GAS PLUMBING PLAN

SCALE: 1/8" = 1'-0"

JEMA
planning architecture interior design

ARCHITECT
JEMA
2823 OLIVE ST.
ST. LOUIS, MO 63103
CONTACT: MICHAEL BARKOVIAK
T: 314.531.7400 X24
E: mbarkoviak@jemastl.com

OWNER
LINCOLN COUNTY FIRE PROTECTION DISTRICT
700 EAST CHERRY STREET
TROY, MO 63379
CONTACT: CHIEF MICHAEL MARLO
T: 314.269.4601
E: mmarlo@lcfpd1.org

GENERAL CONTRACTOR
TBD
TBD
TBD
CONTACT: TBD
T: TBD
E: TBD

STATE OF MISSOURI
DARRELL R. CASE
NUMBER PE-23303
PROFESSIONAL ENGINEER

12/08/2021

LINCOLN COUNTY FIRE - STATION #2

675 HWY. C, MOSCOW MILLS, MO

PERMIT & BID
12/08/21

REVISIONS

NO.	DATE	DESCRIPTION
1	01/03/22	Addendum C

PLAN NORTH 180.00°
TRUE NORTH 145.00°

PROJECT NO: 20-1521.00
ISSUED BY: JEMA
ISSUED DATE: 1/3/2022 2:10:12 PM
SHEET TITLE: WATER AND GAS PLAN

P101

Copyright 2020 © JEMA

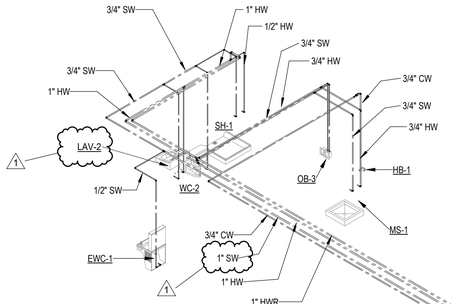

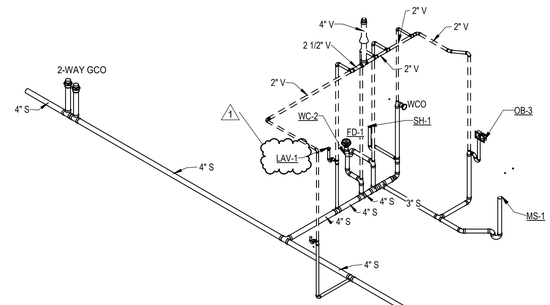

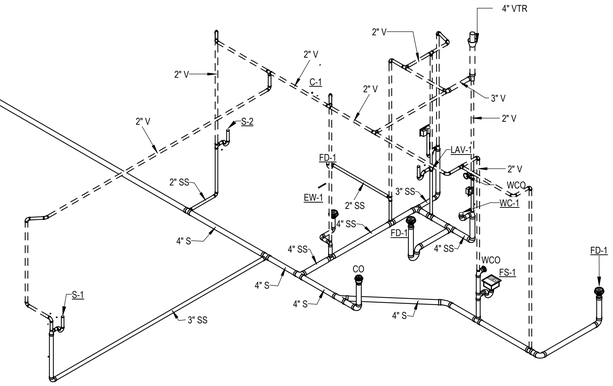

1 P300 SANITARY AND VENT RISER

SCALE:

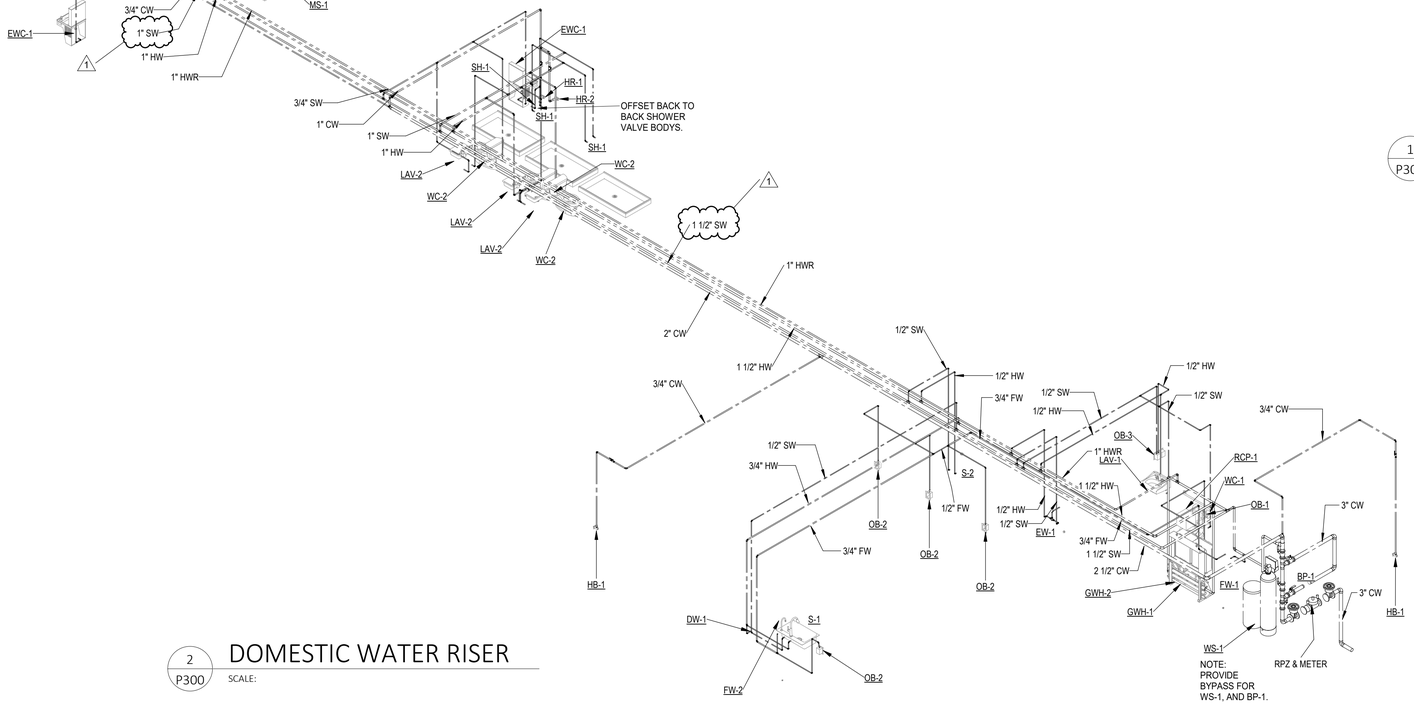

2 P300 DOMESTIC WATER RISER

SCALE:

JEMA
planning architecture interior design

ARCHITECT
JEMA
2823 OLIVE ST.
ST. LOUIS, MO 63103
CONTACT: MICHAEL BARKOVIAK
T: 314.531.7400 X24
E: mbarkoviak@jemastl.com

OWNER
LINCOLN COUNTY FIRE PROTECTION DISTRICT
700 EAST CHERRY STREET
TROY, MO 63379
CONTACT: CHIEF MICHAEL MARLO
T: 314.269.4601
E: mmarlo@lcfpd1.org

GENERAL CONTRACTOR
TBD
TBD
TBD
CONTACT: TBD
T: TBD
E: TBD

STATE OF MISSOURI
DARRELL R. CASE
NUMBER PE-22303
PROFESSIONAL ENGINEER

12/08/2021

LINCOLN COUNTY FIRE - STATION #2

675 HWY. C, MOSCOW MILLS, MO

PERMIT & BID

12/08/21

REVISIONS

NO.	DATE	DESCRIPTION
1	01/03/22	Addendum C

PLAN NORTH 180.00°
TRUE NORTH 145.00°

PROJECT NO. 20-1521.00
ISSUED BY: JEMA
ISSUED DATE: 1/3/2022 2:10:15 PM
SHEET TITLE: PLUMBING ISOMECTRICS

P300

Copyright 2020 © JEMA

PANEL BOARD 'MP'

SURFACE MOUNTED

120/208 VOLTS 3 PHASE 4 WIRE 600A AMP. BUS 65k A.I.C. FULLY RATED

600A MAIN CIRCUIT BREAKER — CIRCUIT BREAKER TYPE

CKT. NO.	TRIP AMPS	NO. POLE	LOAD SERVED	LOAD– V. A. Aø	LOAD– V. A. Bø	LOAD– V. A. Cø	LOAD SERVED	NO. POLE	TRIP AMPS	CKT. NO.
1	15	1	TRH–1	576 1008			EH–1	1	20	2
3	20	1	TRH–2		576 1008		EH–2	1	20	4
5	20	1	DIESEL FUEL TANK			400 1008	EH–3	1	20	6
7	20	1	–SPARE–	-- 1008			EH–4	1	20	8
9	20	1	–SPARE–		-- 1008		EH–5	1	20	10
11	40	2	BOOSTER PUMP (240V) (BUCK BOOST TRANSFORMER SUPPLIED WITH UNIT)	3750 2100			AIR COMPRESSOR	3	30	12
13					3750 2100					14
15	60	3	SCBA ROOM EQ. 15hp			5544 2100				16
17				5544 600			EF–1	1	20	18
19					5544 600		EF–2	1	20	20
21	20	1	MECH TRANSFORMER			500 600	EF–3	1	20	22
23	20	1	EF–7			-- 600	EF–4	1	20	24
25	30	2	PTC–1	3240 600			EF–5	1	20	26
27					3240 1660		EF–6	1	20	28
29	30	2	PTC–3			3240 3240	PTC–2	2	30	30
31				3240 3240						32
33	30	2	PTC–5		3240 3240		PTC–4	2	30	34
35						3240 3240				36
37	60	3	RTU–1	5880 60			SURGE PROTECTION	3	30	38
39					5880 60					40
41						5880 60				42
SUB-FEED BREAKER	200	3	PANEL 'A'	15479	17638	16370				
SUB-FEED BREAKER	200	3	PANEL 'B'	11652	11227	12916				
				57977	57521	62188				

LOAD DESCRIPTION	DEMAND FACTOR D.F.	VOLT – AMPS CONNECTED	VOLT – AMPS DEMAND
LIGHTING	1.25	5527	6909
RECEPTACLES	1st 10KVA @ 100%	27712	10000
RECEPTACLES	REMAINDER @ 50%	--	8856
MISC. EQUIPMENT	0.8	82655	82655
HVAC EQUIPMENT	1.00	61792	61792
	TOTAL–	177686	170212

FULL LOAD AMPS = 472 A.

HT PROVIDE HANDLE TIE ON BREAKERS
L/O PROVIDE LOCK–ON DEVICE
GFCI GROUND FAULT CURRENT INTERRUPTER
GFP GROUND FAULT CURRENT INTERRUPTER PER NEC 427.22

PANEL BOARD 'A'

SURFACE MOUNTED

120/208 VOLTS 3 PHASE 4 WIRE 200A AMP. BUS 42k A.I.C. FULLY RATED

MAIN LUGS ONLY — CIRCUIT BREAKER TYPE

CKT. NO.	TRIP AMPS	NO. POLE	LOAD SERVED	LOAD– V. A. Aø	LOAD– V. A. Bø	LOAD– V. A. Cø	LOAD SERVED	NO. POLE	TRIP AMPS	CKT. NO.
1	20	1	LTG – GENERAL	727 768			LTG – POLE / BLDG EXT.	1	20	2
3	20	1	LTG – GENERAL		997 45		LTG – PATIO	1	20	4
5	20	1	LTG – BUNK ROOMS			470 500	TIMECLOCKS	1	20	6
7	20	1	LTG – APPARATUS BAY	1744 360			REC – PARKING AREA	1	20	8
9	20	1	CLG FANS – APPARATUS BAY		276 1000		APP BAY DOOR CONTROL	1	20	10
11	20	1	–SPARE–			-- 1000	APP BAY DOOR CONTROL	1	20	12
13	20	1	–SPARE–	-- 1000			APP BAY DOOR CONTROL	1	20	14
15	20	1	REC – SERVICE		-- 1000		APP BAY DOOR CONTROL	1	20	16
17	30	2	DUPLEX GPS PUMP			2340 --	–SPARE–	1	20	18
19				2340 --			–SPARE–	1	20	20
21	30	2	DUPLEX GPS PUMP		2340 --		–SPARE–	1	20	22
23						2340 --	–SPARE–	1	20	24
25	25	2	HP–1	2160 3500			DRYING CABINET	3	35	26
27					2160 3500					28
29	20	1	FUTURE ICE MACHINE			-- 3500				30
31	20	1	WATER SOFTNER	-- 1080			EXTRACTOR	3	15	32
33	30	2	UPS		2000 1080					34
35						2000 1080				36
37	20	1	WASHER	1200 600			WATER HEATER	1	20	38
39	30	2	DRYER		2640 600		WATER HEATER	1	20	40
41						2640 500	HOT WATER RECIRC PUMP	1	20	42
				15479	17638	16370				

LOAD DESCRIPTION	DEMAND FACTOR D.F.	VOLT – AMPS CONNECTED	VOLT – AMPS DEMAND
LIGHTING	1.25	5527	6909
RECEPTACLES	1st 10KVA @ 100%	--	--
RECEPTACLES	REMAINDER @ 50%	--	--
MISC. EQUIPMENT	0.8	39640	39640
HVAC EQUIPMENT	1.00	4320	4320
	TOTAL–	49487	50869

FULL LOAD AMPS = 141 A.

HT PROVIDE HANDLE TIE ON BREAKERS
L/O PROVIDE LOCK–ON DEVICE
GFCI GROUND FAULT CURRENT INTERRUPTER
GFP GROUND FAULT CURRENT INTERRUPTER PER NEC 427.22

PANEL BOARD 'B'

SURFACE MOUNTED

120/208 VOLTS 3 PHASE 4 WIRE 200A AMP. BUS 42k A.I.C. FULLY RATED

MAIN LUGS ONLY — CIRCUIT BREAKER TYPE

CKT. NO.	TRIP AMPS	NO. POLE	LOAD SERVED	LOAD– V. A. Aø	LOAD– V. A. Bø	LOAD– V. A. Cø	LOAD SERVED	NO. POLE	TRIP AMPS	CKT. NO.
1	20	1	REC – CONVEIENCE	1260 1440			REC – STATION ALERTING	1	20	2
3	20	1	REC – FACADE		900 360		REC – STATION ALERTING	1	20	4
5	20	1	REC – BUNK ROOMS			1620 1200	REC – SECURITY SYSTEM	1	20	6
7	20	1	REC – BUNK ROOMS	1080 360			REC – LOUNGE	1	20	8
9	20	1	REC – CONVEIENCE		1080 540		REC – KITCHEN	1	20	10
11	20	1	OVERHEAD CHORD REELS			1176 360	REC – PATIO	1	20	12
13	20	1	OVERHEAD CHORD REELS	1176 900			REC – KITCHEN	1	20	14
15	20	1	OVERHEAD CHORD REELS		1176 500		REC – FITNESS TV	1	20	16
17	20	1	OVERHEAD CHORD REELS			1176 500	REC – LOUNGE TV	1	20	18
19	20	1	OVERHEAD CHORD REELS	1176 900			REC – OFFICE	1	20	20
21	20	1	OVERHEAD CHORD REELS		1176 900		REC – OFFICE	1	20	22
23	20	1	OVERHEAD CHORD REELS			1176 360	REC – SCBA	1	20	24
25	20	1	DRINKING FOUNTAIN	500 360			REC – WORKSHOP	1	20	26
27	20	1	GAS SOLENOIDS (2)		100 360		REC – APP BAY	1	20	28
29	20	1	DISHWASHER			852 360	REC – APP BAY	1	20	30
31	20	1	UC HOOD	300 --			EMERGENCY SHUT OFF	1	20	32
33	20	1	GAS RANGE		1800 135		WATER CHILLER	1	20	34
35	20	1	DISPOSAL			936 1000	CLIMBER	1	20	36
37	20	1	FRIDGE	1200 1000			TREADMILL	1	20	38
39	20	1	FRIDGE		1200 1000		BIKE	1	20	40
41	20	1	FRIDGE			1200 1000	ELIPTACLE	1	20	42
				11652	11227	12916	35795			

LOAD DESCRIPTION	DEMAND FACTOR D.F.	VOLT – AMPS CONNECTED	VOLT – AMPS DEMAND
LIGHTING	1.25	--	--
RECEPTACLES	1st 10KVA @ 100%	27712	10000
RECEPTACLES	REMAINDER @ 50%	--	8856
MISC. EQUIPMENT	0.8	8083	8083
HVAC EQUIPMENT	1.00	--	--
	TOTAL–	35795	26939

FULL LOAD AMPS = 75 A.

HT PROVIDE HANDLE TIE ON BREAKERS
L/O PROVIDE LOCK–ON DEVICE
GFCI GROUND FAULT CURRENT INTERRUPTER
GFP GROUND FAULT CURRENT INTERRUPTER PER NEC 427.22

FAULT CURRENT NOTES:

FAULT CURRENT CALCULATIONS WERE PERFORMED BY CASE ENGINEERING BASED ON FAULT CURRENT INFORMATION PROVIDED BY THE LANDLORD TO ESTABLISH BASIS OF DESIGN AIC RATINGS AS IDENTIFIED ON THE DRAWINGS.

PRIOR TO SUBMITTING THE POWER DISTRIBUTION EQUIPMENT PRODUCT DATA FOR REVIEW, THE ELECTRICAL CONTRACTOR SHALL CONTACT THE UTILITY COMPANY TO VERIFY THE FAULT CURRENT VALUES AVAILABLE FROM THE UTILITY COMPANY AND SUBMIT THE UTILITY COMPANY FAULT CURRENT INFORMATION TO THE ENGINEER FOR REVIEW AND EVALUATION.

AFTER THE UTILITY FAULT CURRENT INFORMATION HAS BEEN REVIEWED AND EVALUATED BY THE ENGINEER, ANY REVISIONS TO THE BASIS OF DESIGN AIC VALUES IDENTIFIED ON THE DRAWINGS THAT MAY BE REQUIRED BASED ON THE FAULT CURRENT INFORMATION RECEIVED FROM THE UTILITY COMPANY SHALL BE COMMUNICATED TO THE ELECTRICAL CONTRACTOR.

CONTRACTOR SHALL NOT SUBMIT THE POWER DISTRIBUTION EQUIPMENT FOR REVIEW OR ORDER THE POWER DISTRIBUTION EQUIPMENT UNTIL THE FAULT CURRENT INFORMATION FROM THE UTILITY COMPANY HAS BEEN SUBMITTED TO THE ENGINEER BY THE CONTRACTOR AND THE ENGINEER HAS EVALUATED THE INFORMATION AND PROVIDED FINAL DIRECTION REGARDING THE AIC RATING OF THE POWER DISTRIBUTION EQUIPMENT.

AVAILABLE INTERRUPTING CURRENT CALCULATION

$$f = \frac{1.732 \times (\text{LENGTH OF FEEDER}) \times I_{s.c.}}{(\#\text{ of sets}) \times C \times E_{L-L}}$$

$I_{s.c.}$ = SHORT CIRCUIT AMPS (FROM LANDLORD)
E_{L-L} = LINE TO LINE VOLTAGE
C = VALUE FOR #350 = 19,704

$$f = \frac{1.732 \times 40 \times 61,960}{2 \times 19,704 \times 208} = 0.524$$

$$M = \frac{1}{1+f} = \frac{1}{1.524} = 0.656$$

$$I_{s.c.}^{SYM\ RMS} = I_{s.c.} \times M = 40,656$$

AVAILABLE INTERRUPTING CURRENT CALCULATION

$$f = \frac{1.732 \times (\text{LENGTH OF FEEDER}) \times I_{s.c.}}{(\#\text{ of sets}) \times C \times E_{L-L}}$$

$I_{s.c.}$ = SHORT CIRCUIT AMPS (FROM LANDLORD)
E_{L-L} = LINE TO LINE VOLTAGE
C = VALUE FOR #350 = 19,704

$$f = \frac{1.732 \times 10 \times 40,656}{2 \times 19,704 \times 208} = 0.0859$$

$$M = \frac{1}{1+f} = \frac{1}{1.0859} = 0.921$$

$$I_{s.c.}^{SYM\ RMS} = I_{s.c.} \times M = 37,444$$

AVAILABLE INTERRUPTING CURRENT CALCULATION

$$f = \frac{1.732 \times (\text{LENGTH OF FEEDER}) \times I_{s.c.}}{(\#\text{ of sets}) \times C \times E_{L-L}}$$

$I_{s.c.}$ = SHORT CIRCUIT AMPS (FROM LANDLORD)
E_{L-L} = LINE TO LINE VOLTAGE
C = VALUE FOR #3/0 = 12,844

$$f = \frac{1.732 \times 5 \times 37,444}{1 \times 12,844 \times 208} = 0.121$$

$$M = \frac{1}{1+f} = \frac{1}{1.121} = 0.892$$

$$I_{s.c.}^{SYM\ RMS} = I_{s.c.} \times M = 33,402$$

GENERAL NOTES:

1. EC TO PROVIDE HANDLE TIE ON ALL MULTIWIRE BRANCH CIRCUITS PER NEC 210.4(B).
2. ALL SPARE CIRCUIT BREAKERS AND DISCONNECT SWITCHES SHALL BE LEFT IN THE OFF POSITION.
3. EC SHALL VERIFY THE VOLTAGE AND AMPERAGE REQUIREMENTS OF ALL EQUIPMENT DELIVERED TO THE SITE PRIOR TO CONNECTION. EC SHALL NOTIFY OWNER OF ANY DIFFERENCE.

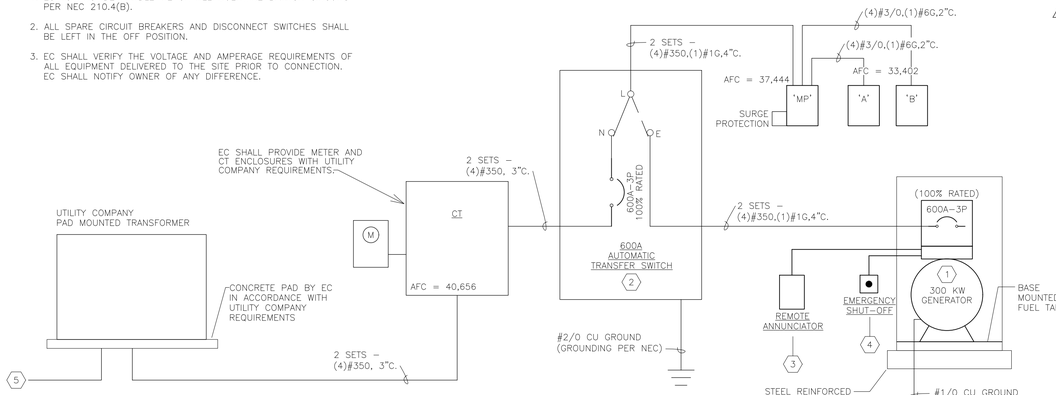

1 E-002 120/208V, 3PH, 4W POWER ONE-LINE DIAGRAM
NO SCALE

KEYED ELECTRICAL:

1. REFER TO SITE PLAN ON SHEET, E101 FOR LOCATION OF EMERGENCY GENERATOR.
2. FURNISH AND INSTALL SERVICE ENTRANCE RATED, AUTOMATIC TRANSFER SWITCH – 120/208V, 600 AMP, THREE–POLE, FOUR–WIRE, WITH A SOLID NEUTRAL, NEMA 3R ENCLOSURE.
3. REFER TO SHEET E–300 FOR LOCATION OF REMOTE ANNUNCIATOR.
4. FIELD VERIFY WITH OWNER LOCATION OF GENERATOR EMERGENCY SHUT–OFF.
5. 4" EMPTY CONDUIT WITH PULLSTRING FOR PRIMARY SERVICE ENTRANCE CONDUCTORS. EXTEND CONDUIT TO UTILITY COMPANY POINT OF SERVICE DELIVERY. PRIMARY SERVICE ENTRANCE CONDUCTORS FURNISHED, INSTALLED AND CONNECTED BY UTILITY COMPANY.

SERVICE NOTES:

IF THE CONTRACTOR ELECTS TO PROVIDE INCOMING SERVICE FEEDERS WITH ALUMINUM CONDUCTORS, CONTRACTOR TO PROVIDE ALUMINUM CONDUCTORS EQUIVALENT IN AMPERAGE CAPACITY TO THE COPPER CONDUCTORS SHOWN ON PLANS.
COORDINATE LUG REQUIREMENTS ON EQUIPMENT WHERE AL CONDUCTORS WILL TERMINATE

CONTRACTOR TO FIELD VERIFY THE DISTANCE FROM THE UTILITY TRANSFORMER TO THE SERVICE DISCONNECT SWITCH. INCREASE THE CONDUCTOR SIZE TO ADJUST FOR VOLTAGE DROP (NOTE: VOLTAGE DROP ON THE INCOMING SERVICE FEEDERS SHALL BE A MAXIMUM OF 2% CONTRACTOR TO INCREASE THE SIZE AND NUMBER OF CONDUITS BASED ON THE CONDUCTORS INSTALLED).

CONTRACTOR TO PROVIDE MAIN GROUNDING ELECTRODE CONDUCTOR, FOR THE GROUNDING ELECTRODE SYSTEM, BASE ON THE SIZE AND TYPE OF SERVICE CONDUCTORS INSTALLED (PER N.E.C. TABLE 205.66). THE GROUNDING ELECTRODE SYSTEM SHALL BE INSTALLED IN ACCORDANCE WITH ARTICLE 250 OF THE CURRENT ADOPTED VERSION OF THE N.E.C..

NEW PANELS HALL BE LABELED TO IDENTIFY THE AVAILABLE FAULT CURRENT AT THE PANEL IN ACCORDANCE WITH NEC REQUIREMENTS.

NEW PANELS SHALL BE LABELED TO IDENTIFY THE ARC FLASH HAZARD AT THE PANEL IN ACCORDANCE WITH NEC REQUIREMENTS.

SERIES RATED CIRCUIT BREAKERS TO COMPLY WITH THE REQUIREMENTS OF NEC 240.86, DISCONNECTING MEANS SHALL BE LABELED PER NEC 110.22.

JEMA
planning architecture interior design

ARCHITECT
JEMA
2823 OLIVE ST.
ST. LOUIS, MO 63103
CONTACT: MICHAEL BARKOVIAK
T: 314.531.7400 X24
E: mbarkoviak@jemastl.com

OWNER
LINCOLN COUNTY FIRE PROTECTION DISTRICT
700 EAST CHERRY STREET
TROY, MO 63379
CONTACT: CHIEF MICHAEL MARLO
T: 314.269.4601
E: mmarlo@lcfpd1.org

GENERAL CONTRACTOR
TBD
TBD
TBD
CONTACT: TBD
T: TBD
E: TBD

STATE OF MISSOURI
DARRELL R. CASE
NUMBER PE-23303
PROFESSIONAL ENGINEER

01/03/2022

LINCOLN COUNTY FIRE - STATION #2

675 HWY. C, MOSCOW MILLS, MO

PERMIT & BID
12/8/2021

REVISIONS

NO.	DATE	DESCRIPTION
1	12/16/2021	ADDENDUM A
2	12/30/2021	ADDENDUM B
3	01/03/2021	ADDENDUM C

PLAN NORTH 180.00°
TRUE NORTH 145.00°

PROJECT NO. 20-1521.00
ISSUED BY: JEMA
ISSUED DATE: 7/22/2021

SHEET TITLE:
POWER ONE-LINE & PANEL SCHEDULES

E-002

CASE Engineering Inc.
796 Merus Court
St. Louis, MO 63026
T 636.349.1600
F 636.349.1730
CERTIFICATE OF AUTHORITY NO. 001498

Copyright 2020 © JEMA

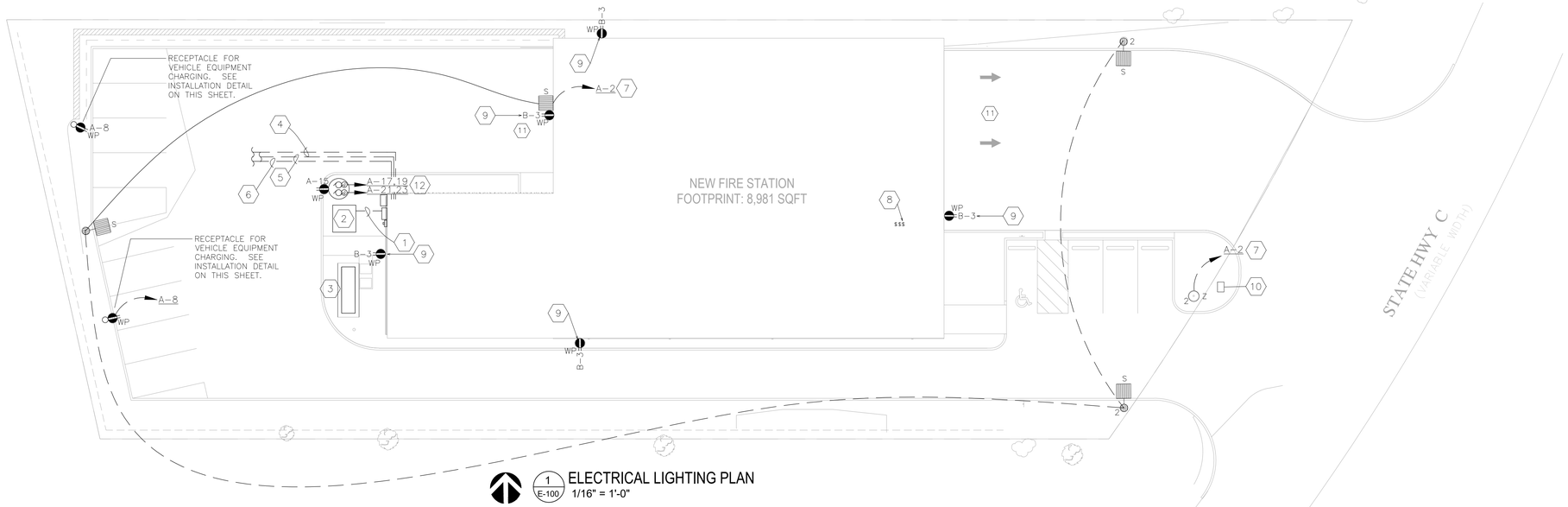

1 E-100 ELECTRICAL LIGHTING PLAN
1/16" = 1'-0"

BID ALTERNATE FOR SNOW MELT SYSTEM: 3

Bid alternate shall include all costs associated with providing a snow melt system at a portion of the front drive.

Components of the system include, but are not necessarily limited to, the following products of the Raychem "ElectroMelt" system:

- EM2-XR self-regulating heating cable - quantity of five hundred (500) linear feet.
- EMK-XP power connection kit - quantity of two (2).
- EMK-XS splice kits - quantity as required by the installation.
- EMK-XEK expansion joint kits - quantity as required by the installation
- EMK-XJB junction box - quantity as required by the installation.
- SD-CIT automatic snow controller - quantity of two (2) required.
- EMK-CT cable ties - quantity as required by the installation
- EMK-MARK labels - quantity as required by the installation
- EMK-XT crimp tool
- All system manufacturer's standard components, fittings and accessories required for a complete and functional system.

Provide two (2) 50 Amp, 2-pole GFCI circuit breakers (30 mA type) for power supply to the snow melt system for operation at 208 Volts, single-phase.

Power supply conductors to each controller shall be (2) #8, (1) #10G - ¾" C.

Snow melt cable and associated system products shall be installed in accordance with the system manufacturers requirements.

Install automatic snow controllers (SD-CIT) on a field fabricated, slotted stainless-steel framing channel assembly anchored with cast-in-place concrete foundations. Coordinate rack location on site with Architect and Owner's representative.

The heating cable shall be protected from damage where it leaves the pavement to the junction box with 1 inch galvanized rigid conduit. Provide one (1) conduit for each heating cable.

All power connections and end seal junction box shall be installed above grade. The junction box shall be sealed to prevent water infiltration.

Proposed equivalent alternative products shall be submitted to the engineer for review prior to submission of bid.

KEYED SITE ELECTRICAL NOTES:

1. UNDERGROUND SECONDARY SERVICE ENTRANCE. COORDINATE ROUTING AND ALL ASPECTS OF WORK WITH ELECTRIC UTILITY COMPANY. REFER TO POWER ONE-LINE DIAGRAM ON SHEET E002 FOR ADDITIONAL INFORMATION. SERVICE CONDUIT(S) INSTALLED UNDER DRIVE AND GENERATOR PAD SHALL BE ENCASED IN CONCRETE.
2. ELECTRIC UTILITY TRANSFORMER, CT/PT, METERING AND ELECTRIC UTILITY SERVICE PRIMARY SECONDARY FEEDERS. REFER TO POWER ONE-LINE DIAGRAM ON SHEET E002 FOR ADDITIONAL ELECTRICAL INFORMATION.
3. LOCATION OF EMERGENCY GENERATOR. REFER TO POWER ONE-LINE DIAGRAM.
4. FURNISH AND INSTALL 3" CONDUIT WITH PULL WIRE TO FIBER NETWORK UTILITY PEDESTAL. CONDUIT TO STUB UP IN ELECTRIC ROOM 117. COORDINATE REQUIREMENTS WITH UTILITY PRIOR TO COMMENCEMENT OF WORK.
5. FURNISH AND INSTALL 3" CONDUIT WITH PULL WIRE TO TELEPHONE UTILITY PEDESTAL. CONDUIT TO STUB UP IN ELECTRIC ROOM 117.COORDINATE REQUIREMENTS WITH UTILITY PRIOR TO COMMENCEMENT OF WORK.
6. FURNISH AND INSTALL 3" CONDUIT WITH PULL WIRE TO CABLE TV UTILITY PEDESTAL. CONDUIT TO STUB UP IN ELECTRIC ROOM 117. COORDINATE REQUIREMENTS WITH UTILITY PRIOR TO COMMENCEMENT OF WORK.
7. ROUTE CIRCUIT THROUGH EXTERIOR LIGHTING CONTROLS. REFER TO SHEET E003 FOR ADDITIONAL INFORMATION.
8. TOGGLE SWITCHE(S) FOR EXTERIOR BUILDING LIGHTING. REFER TO KEYNOTE #1 ON SHEET E-200 – ELECTRICAL LIGHTING PLAN, AND EXTERIOR LIGHTING CONTROL DIAGRAM ON SHEET E-003 FOR ADDITIONAL INFORMATION.
9. PROVIDE GFI DUPLEX RECEPTACLE WITH WEATHERPROOF 'WHILE-IN-USE' COVER ON EACH FACADE.
10. PROVIDE 2" CONDUIT W/ PULL STRING TO QUAZITE BOX FOR FUTURE MONUMENT SIGN.
11. PORTION OF THE DRIVE AREA TO BE EQUIPPED WITH ELECTRICALLY OPERATED SNOW MELTING CABLES. SEE SNOW MELT SYSTEM NOTES FOR ADDITIONAL INFORMATION. 3
12. EC TO PROVIDE BUCK BOOST TRANSFORMERS WITH 208 VOLT, 1ø, PRIMARY AND 240 VOLT, 1ø, 2 WIRE SECONDARY FOR GRINDER PUMPS. EC TO VERIFY EXACT REQUIREMENTS WITH EQUIPMENT SUPPLIER PRIOR TO ORDERING.

GENERAL SITE ELECTRICAL NOTES:

1. UNLESS OTHERWISE NOTED, ALL SITE LIGHTING AND RECEPTACLE CIRCUIT WIRING SHALL BE #8 AWG (CU) IN 1" MINIMUM CONDUIT.
2. SEAL ALL CONDUIT PENETRATION THROUGH EXTERIOR WALLS, WATER TIGHT.
3. ALL CONDUIT AND BOXES TO HAVE WATERTIGHT FITTINGS.
4. COORDINATE WITH EACH UTILITY COMPANY FOR ALL UTILITY SERVICE ENTRANCE REQUIREMENTS, INCLUDING DUCT BANK TERMINATION AND LOCATION DETAILS, TRANSFORMER PAD DETAIL AND CABLE TERMINATION DETAILS. PROVIDE ALL REQUIRED FACILITIES.
5. PROVIDE LIGHT STANDARD FOUNDATION FOR ALL POLE LIGHTS PER DETAIL ON THIS SHEET.
6. PROVIDE LIGHT STANDARD FOUNDATION FOR BOLLARD AND IN-GROUND LIGHTING FIXTURES PER MANUFACTURER'S RECOMMENDATIONS.
7. REFER TO ARCHITECTURAL ELEVATIONS FOR EXACT LOCATIONS AND MOUNTING HEIGHTS OF ALL BUILDING MOUNTED LIGHTING FIXTURES.

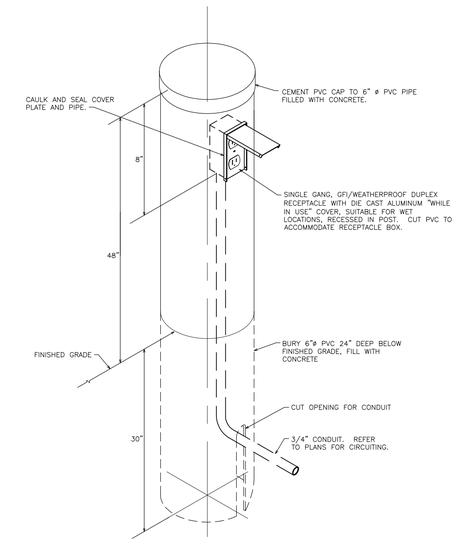

3 E100 OUTDOOR RECEPTACLE AT PARKING INSTALLATION DETAIL
SCALE: NONE

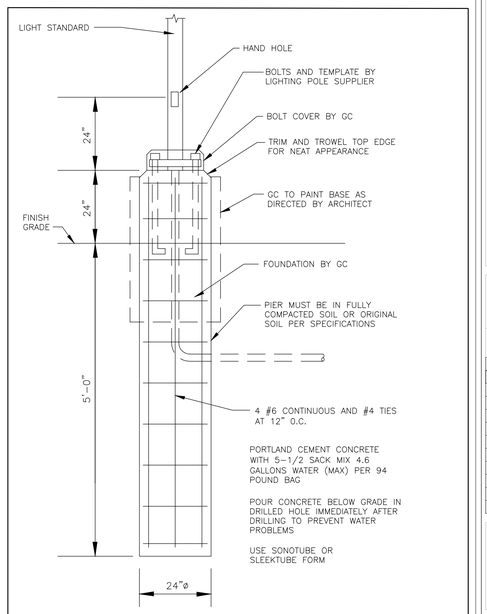

2 E100 LIGHT STANDARD FOUNDATION
SCALE: NONE

JEMA
planning architecture interior design

ARCHITECT
JEMA
2823 OLIVE ST.
ST. LOUIS, MO 63103
CONTACT: MICHAEL BARKOVIAK
T: 314.531.7400 X24
E: mbarkoviak@jemastl.com

OWNER
LINCOLN COUNTY FIRE PROTECTION DISTRICT
700 EAST CHERRY STREET
TROY, MO 63379
CONTACT: CHIEF MICHAEL MARLO
T: 314.269.4601
E: mmarlo@lcfpd1.org

GENERAL CONTRACTOR
TBD
TBD
TBD
CONTACT: TBD
T: TBD
E: TBD

STATE OF MISSOURI
DARRELL R. CASE
NUMBER PE-23303
PROFESSIONAL ENGINEER

01/03/2022

LINCOLN COUNTY FIRE - STATION #2

675 HWY. C, MOSCOW MILLS, MO

PERMIT & BID
12/8/2021

REVISIONS

NO.	DATE	DESCRIPTION
1	12/16/2021	ADDENDUM A
2	12/30/2021	ADDENDUM B
3	01/03/2021	ADDENDUM C

PLAN NORTH 180.00°
TRUE NORTH 145.00°

PROJECT NO.	ISSUED BY:
20-1521.00	JEMA
ISSUED DATE:	7/22/2021

SHEET TITLE:
ELECTRICAL SITE PLAN

E-100

CASE Engineering Inc.
796 Merus Court
St. Louis, MO 63026
T 636.349.1600
F 636.349.1730
CERTIFICATE OF AUTHORITY NO. 001498

Copyright 2020 © JEMA

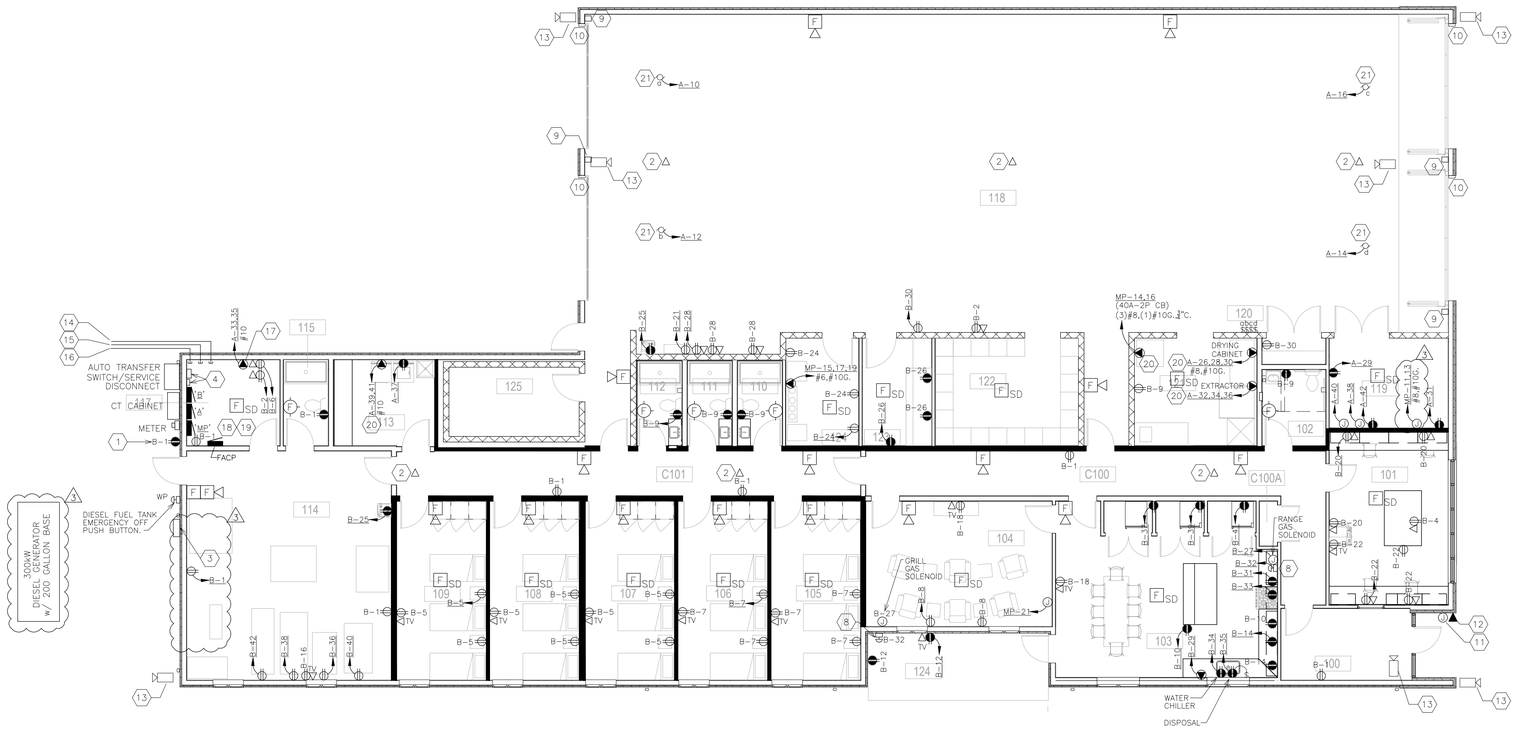

1 E-300 ELECTRICAL POWER PLAN
1/8" = 1'-0"

KEYED NOTES:

1. PROVIDE GFI RECEPTACLE WITH WEATHERPROOF "WHILE-IN-USE" COVER. MOUNT AT 24" ABOVE FINISHED GRADE.
2. FURNISH AND INSTALL CEILING BOX FOR FUTURE CONNECTION OF POE WIFI ROUTERS. PROVIDE TWO CAT6 DATA CABLES ROUTED TO IT CLOSET.
3. LOCATION OF REMOTE ANNUNCIATOR FOR 300kW GENERATOR.
4. WALL MOUNTED MEDIA LOCATION. MOUNT DUPLEX RECEPTACLE, (1) COAX, AND (1) DATA OUTLET. PROVIDE (1) CAT 6 CABLE FOR DATA OUTLET BACK TO DATA RACK IN IT CLOSET. PROVIDE (1) COAX CABLE FOR COAX JACK BACK TO COAX DEMARCATION POINT.
5. NOT USED.
6. NOT USED.
7. NOT USED.
8. 'EMERGENCY OFF' SWITCH TO SHUT DOWN GAS IN THE EVENT OF DISPATCH. REFER TO SHUT-DOWN WIRING DIAGRAM ON THIS SHEET FOR ADDITIONAL INFORMATION.
9. PROVIDE DIRECTIONAL SYSTEMS TRAFFIC CONTROLLER #10893 OR APPROVED EQUAL WITH RELAY AND ALL REQUIRED WIRING TO OPERATE ON OVERHEAD DOOR OPEN SWITCH. SIGNAL TO ILLUMINATE GREEN WHEN DOOR IS OPEN AND RED AT ALL OTHER TIMES. CONNECT TO RESPECTIVE OVERHEAD DOOR 120V CIRCUIT.
10. PROVIDE FEDERAL SIGNAL WARNING LIGHT #LP1-120R OR APPROVED EQUAL WITH RELAY AND ALL REQUIRED WIRING TO OPERATE WHILE OVERHEAD DOOR IS OPENING. CONNECT TO RESPECTIVE OVERHEAD DOOR 120V CIRCUIT.
11. PROVIDE J-BOX WITH CABLE TO IT CLOSET FOR DOORBELL PA ANNOUNCEMENT. PROVIDE EDWARDS NO. 630 PUSHBUTTON. COORDINATE REQUIREMENTS WITH OWNER'S VENDOR.
12. PROVIDE (1)CAT6 CABLES FROM DEVICE TO IT RACK FOR EMERGENCY TELEPHONE.
13. PROVIDE OUTLET BOX, DEVICE RING AND CONDUIT STUB FOR SYSTEM WIRING. CONTRACTOR TO PROVIDE APPROPRIATELY SIZED MUD RING GIVEN THE PROPOSED CONFIGURATION. PROVIDE CAT6 CABLE WITH RJ-45 CONNECTOR ON END FOR CONNECTION TO CAMERA.
14. FURNISH AND INSTALL 3" CONDUIT STUB UP WITH PULL WIRE TO FIBER NETWORK UTILITY PEDESTAL. COORDINATE REQUIREMENTS WITH CHARTER COMMUNICATIONS PRIOR TO COMMENCEMENT OF WORK. REFER TO SITE PLAN ON SHEET E100 FOR ADDITIONAL INFORMATION.
15. FURNISH AND INSTALL 3" CONDUIT STUB UP WITH PULL WIRE TO CABLE UTILITY PEDESTAL. COORDINATE REQUIREMENTS WITH CHARTER COMMUNICATIONS PRIOR TO COMMENCEMENT OF WORK. REFER TO SITE PLAN ON SHEET E100 FOR ADDITIONAL INFORMATION.
16. FURNISH AND INSTALL 3" CONDUIT STUB UP WITH PULL WIRE TO TELEPHONE UTILITY PEDESTAL. COORDINATE REQUIREMENTS WITH CHARTER COMMUNICATIONS PRIOR TO COMMENCEMENT OF WORK. REFER TO SITE PLAN ON SHEET E100 FOR ADDITIONAL INFORMATION.
17. PROVIDE NEMA L5-30R RECEPTACLE FOR UPS.
18. FIELD COORDINATE EXACT LOCATIONS AND MOUNTING HEIGHT OF OUTLETS WITH ARCHITECT, OWNER AND OWNER'S VENDOR.
19. PROVIDE 200 WATT AMPLIFIER IN RACK FOR PAGING SYSTEM. AMPLIFIER TO BE CAPABLE OF DRIVING ALL SPEAKERS AND HAVE INPUTS FOR ALERT TONE SYSTEM.
20. CONTRACTOR SHALL VERIFY NEMA CONFIGURATION WITH EQUIPMENT REQUIREMENTS.
21. PROVIDE CONNECTION TO OVERHEAD DOOR MOTOR. PROVIDE WIRING WITHIN 3/4" CONDUIT DOWN TO TIMER DOOR CONTROLLER LOCATION. PROVIDE 3/4" WIRING WITHIN CONDUIT TO ASSISTANT CHIEF'S OFFICE FOR DOOR OPEN CONTROL BUTTON. PROVIDE 3/4" WIRING WITHIN CONDUIT TO DOOR OPEN SIGNAL LIGHT LOCATION AND THROUGH WALL TO EXTERIOR SIGNAL DEVICE. PROVIDE 3/4" WIRING WITHIN CONDUIT TO FIRE STATION CONTROLLER AT IT CLOSET FOR FUTURE DOOR TIMER CONTROL WIRING. VERIFY INSTALLATION REQUIREMENTS WITH MANUFACTURER AND LOCATIONS WITH ARCHITECT PRIOR TO ROUGH-IN.

ALERTING SYSTEM NOTES:

ALL ALERTING SYSTEM DATA TO BE CAT6.

EACH BUNK ROOM TO CONTAIN (2)8" SPEAKERS [(1)PAGING RADIO & (1)SCANNER]. PROVIDE (1)SINGLE GANG WALL BOX WITH CONDUIT EXTENDED ABOVE CEILING FOR VOLUME CONTROL & ½" WIRE FROM AMPLIFIER TO EACH SPEAKER IN EACH ROOM.

GENERAL ELECTRICAL NOTES:

ALL IT DATA TO BE CAT6

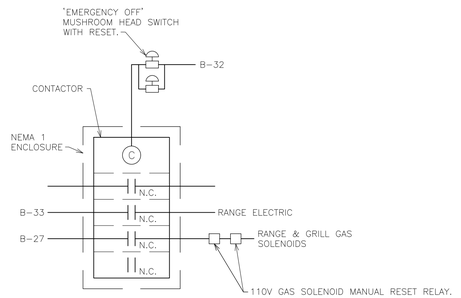

COORDINATE THIS SCHEMATIC WITH OWNER'S ALERT/TONE SYSTEM PRIOR TO ORDERING AND INSTALLATION AS IT MAY BE CONTROLLED BY ALERT/TONE SYSTEM.

ROOM SCHEDULE	
NUMBER	NAME
100	LOBBY
101	OFFICE
102	ADA RR
103	KITCHEN/DINING
104	DAYROOM
105	BUNK ROOM
106	BUNK ROOM
107	BUNK ROOM
108	BUNK ROOM
109	BUNK ROOM
110	BATH
111	BATH
112	BATH
113	WASH/DRY
114	FITNESS
115	BATH
116	J.C./SUPPLIES
117	ELEC
118	APPARATUS BAY
119	WH, ICE, SPRINKLER, STORAGE
120	EMS STOR
121	DECON/EXTRACT
122	GEAR TURNOUT
123	WORKSHOP
124	SCBA
125	PATIO
C100	STORM SHELTER
C100A	CLOSET
C101	CORRIDOR

CASE Engineering Inc.
796 Merus Court
St. Louis, MO 63026
T 636.349.1600
F 636.349.1730
CERTIFICATE OF AUTHORITY NO. 001498

JEMA
planning architecture interior design

ARCHITECT
JEMA
2823 OLIVE ST.
ST. LOUIS, MO 63103
CONTACT: MICHAEL BARKOVIAK
T: 314.531.7400 X24
E: mbarkoviak@jemastl.com

OWNER
LINCOLN COUNTY FIRE PROTECTION DISTRICT
700 EAST CHERRY STREET
TROY, MO 63379
CONTACT: CHIEF MICHAEL MARLO
T: 314.269.4601
E: mmarlo@lcfpd1.org

GENERAL CONTRACTOR
TBD
TBD
TBD
CONTACT: TBD
T: TBD
E: TBD

STATE OF MISSOURI
DARRELL R. CASE
NUMBER PE-23303
PROFESSIONAL ENGINEER

01/03/2022

LINCOLN COUNTY FIRE - STATION #2

675 HWY. C, MOSCOW MILLS, MO

PERMIT & BID
12/8/2021

REVISIONS

NO.	DATE	DESCRIPTION
1	12/16/2021	ADDENDUM A
2	12/30/2021	ADDENDUM B
3	01/03/2021	ADDENDUM C

PLAN NORTH 180.00°
TRUE NORTH 145.00°

PROJECT NO.	ISSUED BY:
20-1521.00	JEMA

ISSUED DATE: 7/22/2021

SHEET TITLE:
ELECTRICAL POWER PLAN

E-300

Copyright 2020 © JEMA