New Restaurant, Banquet Center & Corporate Offices

The Junction
Sugarfire Smoke House

600 West Main
Wentzville, Missouri 63385

CODE DATA SUMMARY

PROJECT DESCRIPTION	THE JUNCTION – NEW GROUND UP SUGARFIRE SMOKEHOUSE BBQ RESTAURANT, BANQUET CENTER AND CORPORATE OFFICES
JURISDICTION	CITY OF WENTZVILLE, MISSOURI WENTZVILLE FIRE PROTECTION DISTRICT, WENTZVILLE, MISSOURI
BUILDING CODES	CONSTRUCTION SHALL CONFORM TO THE FOLLOWING CODES: CITY OF WENTZVILLE HAS ADOPTED THE FOLLOWING CODES WITH AMENDMENTS: 2015 INTERNATIONAL BUILDING CODE, I.B.C. 2014 NATIONAL ELECTRICAL CODE, N.E.C. 2015 INTERNATIONAL MECHANICAL CODE, I.M.C. 2015 INTERNATIONAL PLUMBING CODE, I.P.C. 2009 ICC/ANSI A117.1 – ACCESSIBILITY CODE, I.A.C. WENTZVILLE FIRE PROTECTION DISTRICT HAS ADOPTED THE FOLLOWING CODES WITH AMENDMENTS: 2015 INTERNATIONAL BUILDING CODE, I.B.C. 2015 INTERNATIONAL FIRE CODE, I.F.C.
CHAPTER 5 USE GROUP	USE GROUP: A–2, RESTAURANT & BANQUET CENTER
CHAPTER 5 HEIGHT AND AREA	BASE ALLOWABLE HEIGHT: PER TABLE 504.3 A–2, S, TYPE IIB = 75 FEET BASE ALLOWABLE STORIES: PER TABLE 504.4 A–2, S, TYPE IIB = 3 STORIES ACTUAL HEIGHT: 24 FEET HEIGHT AND ONE (1) STORY BASE ALLOWABLE AREA: PER TABLE 506.2 A–2, S1, TYPE IIB = 38,000 SQ.FT. ACTUAL AREA: 7,584 SQ.FT. – INCLUDES SUGARFIRE RESTAURANT 4,913 S.F. BANQUET CENTER 1,447 S.F. OFFICES (<10%) 677 S.F. SUPPORT/STORAGE ROOMS 547 S.F.
CHAPTER 6 TYPE OF CONSTRUCTION	IIB – UNPROTECTED, FULLY SPRINKLERED
CHAPTER 6 FIRE RESISTANCE RATING CHART	TABLE 601 FIRE–RESISTANCE RATING REQUIREMENTS FOR BUILDING ELEMENTS TYPE IIB: 0 HOURS FOR ALL BUILDING ELEMENTS
CHAPTER 7 FLAME SPREAD	PER SECTIONS 803 AND 805 – ALL ITEMS 25 OR LESS TESTED BY ASTM.E84
CHAPTER 7 SMOKE DEVELOPED	PER SECTIONS 803 AND 805 – ALL ITEMS 450 OR LESS, TESTED BY ASTM.E84
CHAPTER 8 INTERIOR FINISHES	SHALL COMPLY WITH THE 2015 IBC CHAPTER 8
CHAPTER 9 FIRE PROTECTION SYSTEMS	AUTOMATIC FIRE SPRINKLER SYSTEM
CHAPTER 9 FIRE EXTINGUISHERS	PORTABLE FIRE EXTINGUISHERS SHALL BE PROVIDED IN ACCORDANCE WITH SECTION 906 OF THE 2015 IBC AND LOCATED BY FIRE MARSHAL.
CHAPTER 10 MEANS OF EGRESS AND OCCUPANCY LOADS	ASSEMBLY WITHOUT FIXED SEATS – UNCONCENTRATED (TABLES & CHAIRS) 15 NET RESTAURANT DINING & TAKE–OUT: 2,379 / 15 SQ.FT. PER OCCUPANT = 158 OCCUPANTS BANQUET CENTER: = 1,447 SQ.FT. / 15 SQ.FT. PER OCCUPANT = 96 OCCUPANTS KITCHEN: 1,693 SQ.FT. / 200 SQ.FT. PER OCCUPANT = 9 OCCUPANTS OFFICE: 677 SQ.FT. / 100 SQ.FT. PER OCCUPANT = 7 OCCUPANTS TOTAL = 270 OCCUPANTS TABLE 1006.3.1 EGRESS – 2 MEANS OF EGRESS REQUIRED, 9 PROVIDED. SECTION 1010.1.5 FLOOR ELEVATION – THERE SHALL BE A FLOOR OR LANDING ON EACH SIDE OF A DOOR. SUCH FLOOR OR LANDING SHALL BE AT THE SAME ELEVATION ON EACH SIDE OF THE DOOR. SECTION 1010.1.9 DOOR OPERATIONS – EGRESS DOORS SHALL BE READILY OPENABLE FROM THE EGRESS SIDE WITHOUT THE USE OF A KEY OR SPECIAL KNOWLEDGE OR EFFORT. TABLE 1017.2 TRAVEL DISTANCE – MAXIMUM TRAVEL DISTANCE LESS THAN 250'
CHAPTER 29 PLUMBING SYSTEMS	PLUMBING FIXTURE REQUIREMENTS: 270 TOTAL = 135 MEN & 135 WOMEN PLUMBING FIXTURE – CALCULATION – REQUIRED – PROVIDED WATER CLOSETS, MEN & WOMEN – 1 per 75 – WOMEN 2, MEN 2 – 3, 2 PLUS 1 URINAL LAVATORIES, MEN & WOMEN – 1 per 200 – WOMEN 2, MEN 2 – 2, 2 DRINKING FOUNTAIN: 1 REQUIRED – 2 PROVIDED (Hi–Low) IN BANQUET CENTER AND WATER PROVIDED IN THE ICE/SODA UNIT IN THE SUGARFIRE RESTAURANT MOP SINK: 1 REQUIRED & 1 PROVIDED
DOORS	ALL DOORS SHALL NOT REQUIRE MORE THAN 5lbs OF FORCE TO OPEN
SIGNS	ALL SIGNS TO COMPLY WITH SIGNAGE SECTION OF THE 2015 IBC
ROOF	A MINIMUM CLASS C FIRE RATED ROOF COVERING IS REQUIRED.

ALL CURTAINS, DRAPERIES, HANGINGS AND OTHER DECORATIVE MATERIALS SUSPENDED FROM WALLS OR CEILING SHALL BE NONCOMBUSTIBLE OR BE MAINTAINED FLAME–RESISTANT. THE PERMISSIBLE AMOUNT OF NONCOMBUSTIBLE DECORATIVE HANGINGS SHALL NOT BE LIMITED. THE PERMISSIBLE AMOUNT OF FLAME–RESISTANT DECORATIVE HANGINGS SHALL NOT EXCEED 10 PERCENT OF THE TOTAL WALL AND CEILING AREA.

FIRE BLOCKING IS TO BE INSTALLED WITHIN CONCEALED SPACES OF EXTERIOR ARCHITECTURAL ELEMENTS IN COMPLIANCE WITH THE 2015 IBC.

CONTRACTORS NOTES:

1. THE CONSTRUCTION DOCUMENTS HAVE BEEN CAREFULLY PREPARED BUT MAY NOT DEPICT EVERY CONDITION TO BE ENCOUNTERED. IT IS THEREFORE THE GENERAL CONTRACTORS & SUBCONTRACTORS RESPONSIBILITY TO FIELD VERIFY ALL CONDITIONS OF AFFECTED WORK PRIOR TO SUBMITTING A BID OR STARTING ANY WORK. IF CONDITIONS DIFFER, OR ADDITIONAL WORK IS REQUIRED BEYOND THAT STATED IN THE CONSTRUCTION DOCUMENTS IT IS THE CONTRACTORS RESPONSIBILITY TO BRING SUCH MATTERS TO THE ATTENTION OF THE ARCHITECT IN A REASONABLE TIME PERIOD.

2. PRIOR TO THE BID SUBMISSION, CONTRACTOR SHALL INCLUDE SUCH INSTANCES IN THEIR BID SUM OR QUALIFY IN THE BID SUBMITTAL.

3. ALL CONSTRUCTION DOCUMENTS REPRESENT A COMPREHENSIVE SCOPE OF WORK. IT IS THE CONTRACTOR'S RESPONSIBILITY TO REFERENCE ALL DRAWINGS, SPECIFICATIONS, ADDENDUM AND CHANGE ORDERS (IF APPLICABLE) TO VERIFY THEIR RESPECTIVE SCOPE OF WORK.

4. CONTRACTOR SHALL FIELD VERIFY ALL DIMENSIONS PRIOR TO ORDERING MATERIAL, EQUIPMENT, MILLWORK, ETC.

ACCESSIBILITY:

1. H.C. ACCESS TO THESE FACILITIES SHALL BE PROVIDED AT PRIMARY ENTRANCE.

2. THE SLOPE OF WALKS SHALL NOT EXCEED MAX., CROSS SLOPE 2% WALKING SURFACE SLOPING GREATER THAN 2% SHALL BE SLIP RESISTANT.

3. EVERY REQUIRED EXIT DOORWAY SHALL BE SIZED FOR A DOOR NOT LESS THAN 3 FT. WIDE BY NOT LESS THAN 6'–8" HIGH CAPABLE OF OPENING 90 DEGREES AND MOUNTED SO THAT THE CLEAR WIDTH OF THE EXIT WAY IS 32" MIN.

4. THRESHOLD TO BE A MAX. 1/4" ABOVE ADJACENT FINISH FLOOR.

5. MAXIMUM EFFORT TO OPERATE DOORS SHALL NOT EXCEED 5 LB..

6. THE BOTTOM 10" OF ALL DOORS EXCEPT AUTOMATIC AND SLIDING SHALL HAVE A SMOOTH UNINTERRUPTED SURFACE.

7. PROVIDE LEVER TYPE HARDWARE, PANIC BARS, PUSH – PULL ACTIVATING BARS, OR OTHER HARDWARE DESIGNED TO PROVIDE PASSAGE WITHOUT REQUIRING THE ABILITY TO GRASP THE OPENING HARDWARE. (30" TO 44" A.F.F.)

8. ALL DOORWAYS LEADING TO SANITARY FACILITIES SHALL HAVE 32" CLEAR UNOBSTRUCTED OPENINGS.

9. INSULATE HOT WATER AND DRAIN PIPES AT HAND SINKS.

10. FAUCET CONTROLS SHALL BE OPERABLE WITH ONE HAND AND NOT REQUIRE GRASPING, PINCHING, OR TWISTING. FAUCET TO HAVE MAX. 5 LB.. OPERATING FORCE.

FIRE EXTINGUISHER NOTES:

1. GENERAL CONTRACTOR TO PROVIDE AND INSTALL FIRE EXTINGUISHERS THROUGHOUT THE SPACES PER 2015 IFC & LOCAL CODE REQUIREMENTS & THE LOCAL FIRE MARSHAL DIRECTION. 75FT. MAXIMUM SPACING ALLOWED.

2. FOR BIDDING PURPOSES PROVIDE AND INSTALL SIX (6) LARSEN 2409–R5 SEMI–RECESSED 1½" FIRE EXTINGUISHER CABINETS.

GENERAL NOTES:

1. BAALMAN ARCHITECTS IS ISSUING THIS SET OF CONSTRUCTION DOCUMENTS TO FACILITATE CONSTRUCTION BY EXPRESSING THE DESIGN CONCEPT OF THIS PROJECT. ADDITIONAL DETAILED SHOP DRAWINGS AND SUBMITTALS WILL BE REQUIRED FOR PROCURING, PLACING AND CONSTRUCTING THE FINISHED WORK.

2. BAALMAN ARCHITECTS ASSUMES THE GENERAL CONTRACTOR HAS INCLUDED IN HIS BID THE HIGHEST QUALITY AND GREATEST QUANTITY FOR THE PURPOSE OF RESOLVING ANY CONFLICTS IN THE CONSTRUCTION DOCUMENTS WHICH ARE IMPLIED OR UNDEFINED.

3. ALL WORK SHALL COMPLY WITH THE CURRENT FEDERAL, STATE AND AND ALL LOCAL CODES AND ORDINANCES. CONTRACTOR SHALL VERIFY ALL DIMENSIONS AND SITE CONDITIONS AND SHALL REPORT ANY INCONSISTENCIES TO THE ARCHITECT.

4. DRAWINGS ARE NOT TO BE SCALED. DIMENSIONAL DISCREPANCIES SHALL BE CLARIFIED WITH THE ARCHITECT.

5. ALL DIMENSIONS ARE TO FACE OF GYP. BOARD, CONCRETE, MASONRY OR BRICK UNLESS OTHERWISE NOTED.

6. THE ARCHITECT SHALL REVIEW FOR APPROVAL ALL COLOR SAMPLES. MANUFACTURERS SHALL VERIFY CONFORMANCE WITH THE DESIGN INTENT AND SCOPE OF THE CONTRACT DOCUMENTS.

7. CONTRACTOR SHALL VERIFY LOCATION AND SHALL PROVIDE PROTECTION FOR UTILITIES WITHIN THE WORK AREA, WHETHER OR NOT INDICATED IN THE DRAWINGS.

8. CONTRACTOR SHALL NOTIFY UTILITY COMPANY AND OWNER IMMEDIATELY SHOULD SERVICE BE INTERRUPTED.

9. CONTRACTOR SHALL TAKE STEPS NECESSARY TO PREVENT EROSION DAMAGE ON OR OFF THE SITE AND REPAIR ANY DAMAGE RESULTING FROM THIS WORK AT NO COST TO THE OWNER.

10. WHERE POSSIBLE THE CONTRACTOR SHALL AVOID DAMAGING EXISTING TREES AND LANDSCAPING. CONTRACTOR SHALL COORDINATE THE DESTRUCTION OF ANY LANDSCAPE WITH THE ARCHITECT.

11. CONTRACTOR SHALL REMOVE ALL SURPLUS MATERIALS, FALSE WORK, TEMPORARY STRUCTURES, INCLUDING : FOUNDATIONS AND DEBRIS OF ANY NATURE RESULTING FROM THEIR OPERATIONS, AND PUT THE SITE IN A NEAT AND ORDERLY CONDITION.

12. CONTRACTORS SHALL VERIFY ALL EXISTING CONDITIONS AND DIMENSIONS AT SITE PRIOR TO SUBMITTING PROPOSAL ON THE PROJECT AND NOTIFY THE ARCHITECT AS TO ANY DISCREPANCIES OR CHANGES DISCOVERED.

13. SUBCONTRACTORS SHALL FAMILIARIZE THEMSELVES WITH ALL PORTIONS OF THE DRAWINGS, SPECIFICATIONS, ADDENDUM AND CHANGE ORDERS THAT PERTAIN TO THEIR WORK.

14. IT IS THE GENERAL CONTRACTOR'S RESPONSIBILITY TO COORDINATE, LOCATE AND CONFIRM ALL FLOOR SINK, UNDERGROUND / OVERHEAD PLUMBING AND ELECTRICAL STUB–UPS.

15. ALL EXPOSED UNFINISHED METAL AND WOOD SHALL BE PAINTED AS PER DRAWINGS AND SPECIFICATIONS.

17. ALL FINISHES AND FINISH MATERIALS, COLORS AND TEXTURES SHALL BE VERIFIED WITH THE OWNER AND ARCHITECT PRIOR TO INSTALLATION, FABRICATION OR ORDERING.

GEOTECHNICAL INFORMATION:

REFER TO THE GEOTECHNICAL REPORT PRODUCED BY SCI ENGINEERING, DATED JUNE 7, 2017.

SHOP DRAWINGS

1. SHOP DRAWINGS, UNLESS OTHERWISE NOTED, SHALL BE SUBMITTED FOR REVIEW PRIOR TO FABRICATION.

2. THE CONTRACTOR SHALL PROVIDE SHOP DRAWINGS (AT A MINIMUM) FOR THE FOLLOWING SCOPES OF WORK:

a. ALL STRUCTURAL COMPONENTS INCLUDING BUT NOT LIMITED TO PRE–ENGINEERED TRUSS DRAWINGS & CALCULATIONS.

b. CONCRETE & REBAR, STRUCTURAL STEEL & OTHER STRUCTURAL ITEMS OUTLINED WITHIN THE STRUCTURAL DRAWINGS.

c. ALL EXTERIOR FINISH MATERIALS INCLUDING BUT LIMITED TO: CMU, STONE, BRICK, ROOFING, GUTTERS, DOWN SPOUTS AND SHEET METAL MATERIALS.

d. ALL INTERIOR MATERIALS AND FINISHES INCLUDING BUT NOT LIMITED TO INTERIOR ROOF DRAINS, MECHANICAL, PLUMBING & PLUMBING FIXTURES, ELECTRICAL INCLUDING LIGHTING, DOORS, DOOR FRAMES, HARDWARE, WINDOWS, CASEWORK AND FLOORING.

Project Location Map

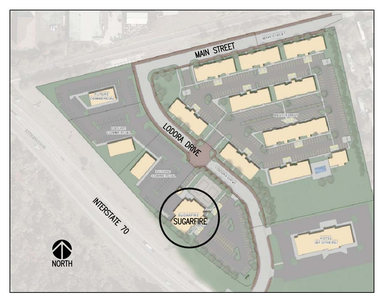

NOTICE TO BIDDING CONTRACTORS:

BIDDING CONTRACTORS ARE TO CONTACT LAYNECO CONSTRUCTION SERVICES WITH ANY REQUESTS FOR INFORMATION AND QUESTIONS DURING THE BIDDING TIME PERIOD. CONTACT: STEVE LAYNE, 636–734–6968

Project Design Team:

Architect:

Baalman Architects
#2 Daniel Drive
O'Fallon, Missouri 63366

Michael J. Baalman, Architect
Ph: 314-640-6212
mike@baalmanarchitects.com

John K. Luehrs, Project Manager
Ph: 314-591-0814
john@baalmanarchitects.com

Civil Engineer:

Premier
308 TCW Court
Lake Saint Louis, MO 63367

Jim DuBois
Ph: 314-925-7444
jdubois@premiercivil.com

Matt Fogarty
mfogarty@premiercivil.com

Structural Engineer:

AEdifica Case Engineering
796 Merus Court
St. Louis, MO 63026

Steve Sacco, P.E.
Ph: 636-349-1600 ext. 223
ssacco@aedifica.com

Matt Bono
Ph: 636-349-1600 ext. 259
mbono@aedifica.com

MEP/FP Engineer:

G&W Engineering
138 Weldon Pkwy
Maryland Heights, MO 63043

Amanda Buchheit, Project Manager
Ph: 314-236-6370
ABuchheit@gandwengineering.com

Kitchen Designer:

DGG, Inc. Dennis G. Glore, Inc.
Mike Glore
Ph: 636-938-7887
mike.glore@dgg-inc.com

General Contractor:

Layneco Construction Services
1027 Cool Springs Industrial Drive
O'Fallon, MO 63366

Steve Layne, Principal
Ph: 636-734-6968

Issue:	Date:
Owner & Bid Set:	June 18, 2018
Addendum No. 1:	June 28, 2018

Drawing Index

Civil Drawings:
Provided by Premier Civil Engineering under separate cover.

Food Service Equipment Drawings:
Provided by DGG under separate cover.

Architectural Drawings:
A0.1 Cover Sheet, Code Data & Notes
A1.0 Architectural Site Plan
A2.1 Floor Plan & Partition Types
A2.2 Finish Floor Plan & Room Finish Schedule
A2.3 Reflected Ceiling Plan & Details
A2.4 Roof Plan & Details
A3.1 Exterior Elevations
A3.2 Exterior Elevations
A3.3 Building Sections
A4.1 Wall Section & Detail
A4.2 Wall Section & Detail
A4.3 Wall Sections
A4.4 Wall Sections
A4.5 Main Front Canopy Section
A4.6 Main Front Canopy Cross-Section
A4.7 Small Front Canopy Section
A5.1 Enlarged Floor Plans & Interior Elevations
A5.2 Tower Element Elevations & Sections
A5.3 Enlarged Front Portico Plan, Sections & Details
A5.4 Outdoor Bar & Deck Plan & Section
A5.5 Stair Plan & Elevations
A5.6 Stair Sections & Details
A5.7 Outdoor Restrooms, Sections & Details
A6.1 Door Schedule & Door-Window Types

Structural Drawings:
S1.1 General Notes
S1.2 General Notes
S1.3 Typical Details
S1.4 Typical Details
S2.1 Dimensioned Foundation Plan
S2.2 Foundation Plan
S2.3 Roof Framing Plan - Main Structure
S2.4 Roof Framing Plan - Secondary
S3.1 Foundation & Roof Framing Plan - Restroom & Trash Enclosure
S4.1 Foundation Sections
S4.2 Framing Sections
S4.3 Framing Sections
S5.1 Tower Framing Plans, Elevations & Sections
S6.1 Diagonal Bracing Plan, Elevation & Sections

Mechanical, Plumbing/FP, Electrical Drawings:
M0.1 Mechanical Title Sheet
M1.0 Mechanical Schedules
M1.1 Mechanical Details
M2.0 Mechanical Ceiling Plan
M3.0 Mechanical Roof Plan

P0.1 Plumbing Title Sheet
P0.2 Plumbing Notes
P0.3 Plumbing Details
P2.0 Plumbing Floor Plan
P2.1 Plumbing Kitchen Plan
P3.0 Plumbing Roof Plan

E0.1 Electrical Title Sheet
E0.2 Electrical Schedules and Details
E0.3 Electrical Schedules
E1.0 Electrical Site Plan
E2.0 Floor Plan - Power & Systems
E2.1 Kitchen Plan - Electrical
E2.2 Roof Plan - Electrical
E3.0 Ceiling Plan - Lighting

COPYRIGHT © 2018 BAALMAN ARCHITECTS

BAALMAN ARCHITECTS
#2 Daniel Drive
O'Fallon, MO 63366
ph: 314.640.6212

Michael J. Baalman
ARCHITECT
License#: A-2012004035
Certificate of Authority: 2014003655

STRUCTURAL
AEDIFICA CASE ENGINEERING
796 MERUS COURT
ST. LOUIS, MO 63026
CONTACT: STEVE SACCO, P.E.
PHONE: 636-349-1600

MECHANCIAL, PLUMBING, ELECTRICAL AND FIRE PROTECTION SYSTEMS
G&W ENGINEERING
138 WELDON PKWY
MARYLAND HEIGHTS, MO 63043
CONTACT: KEVIN GRIESEMER
PHONE: 314-469-3737

New Restaurant, Banquet Center & Corporate Offices at The Junction for:
Sugarfire Smoke House
600 West Main
Wentzville, Missouri 63385

DATE	ISSUE	R#
6–15–18	Owner & Bid Set	

Michael J. Baalman
ARCHITECT

PROJECT MANAGER: MJB
DRAWN BY: JKL

PROJECT NUMBER
16-076
DATE
June 15, 2018

SHEET
A0.1
CODE DATA NOTES & SHEET INDEX

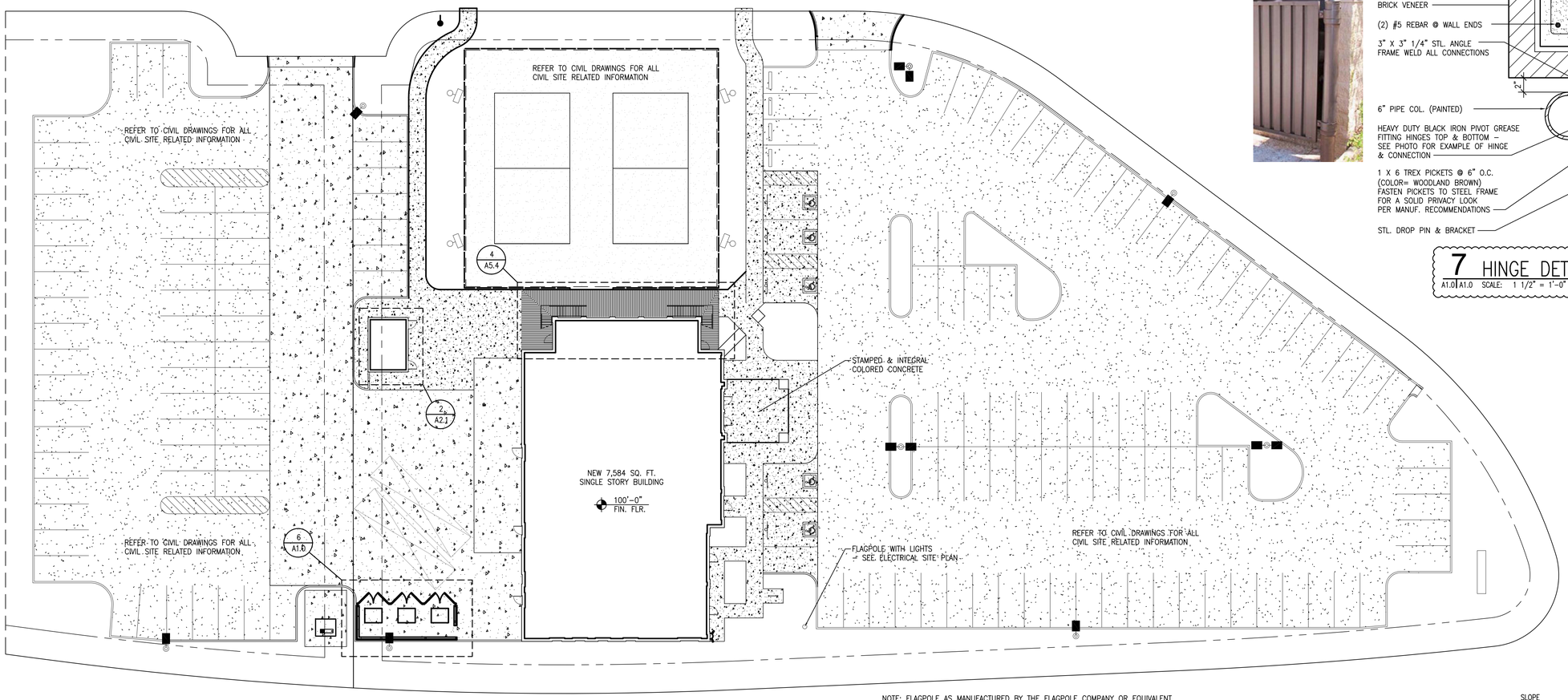

NOTE: FLAGPOLE AS MANUFACTURED BY THE FLAGPOLE COMPANY OR EQUIVALENT. 25 ft. COMMERCIAL INTERNAL HALYARD CAM CLEAT TAPERED FLAGPOLE WITH INTERNAL REVOLVING TRUCK ASSEMBLY, CLEAR ANODIZED BALL FINIAL, MACHINE SPUN ALUMINUM FLASH COLLAR, CLEAR ANODIZED FINISH. www.theflagpoleco.com

1 ARCHITECTURAL SITE PLAN

A1.0 | A1.0 SCALE: 20" = 1'-0"

NORTH

THIS ARCHITECTURAL SITE PLAN IS FOR REFERENCE ONLY.
REFER TO CIVIL DRAWINGS BY PREMIER FOR ALL CIVIL RELATED INFORMATION.

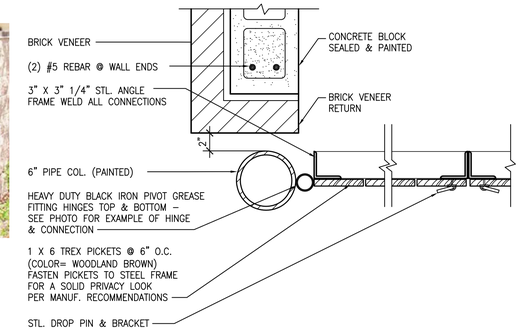

7 HINGE DETAIL

A1.0 | A1.0 SCALE: 1 1/2" = 1'-0"

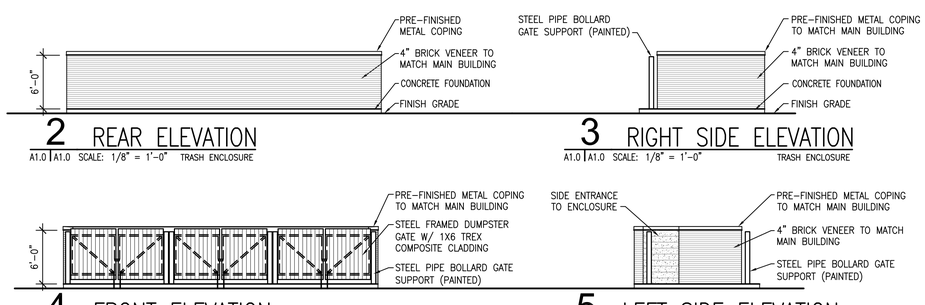

2 REAR ELEVATION

A1.0 | A1.0 SCALE: 1/8" = 1'-0" TRASH ENCLOSURE

3 RIGHT SIDE ELEVATION

A1.0 | A1.0 SCALE: 1/8" = 1'-0" TRASH ENCLOSURE

4 FRONT ELEVATION

A1.0 | A1.0 SCALE: 1/8" = 1'-0" TRASH ENCLOSURE

5 LEFT SIDE ELEVATION

A1.0 | A1.0 SCALE: 1/8" = 1'-0" TRASH ENCLOSURE

BIDDING NOTE: 1
TRASH ENCLOSURE: PROVIDE AN ALTERNATE FOR 8" INTEGRALLY COLORED (COLOR: TBD) CMU IN LIEU OF SMOOTHFACE CMU/BRICK AS SHOWN ON TRASH ENCLOSURE PLAN & SECTION.

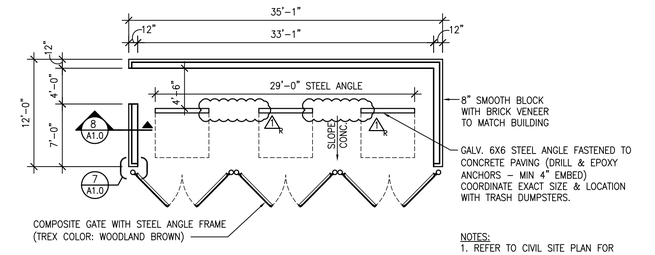

NOTES:
1. REFER TO CIVIL SITE PLAN FOR TRASH ENCLOSURE LOCATION.
2. GC TO VERIFY INSIDE CLEAR SPACE WITH CITY REQUIREMENTS.

6 TRASH ENCLOSURE PLAN

A1.0 | A1.0 SCALE: 1/8" = 1'-0"

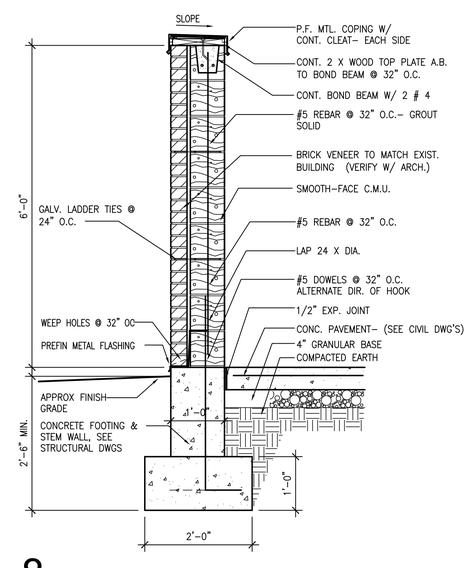

8 SECT. THRU TRASH ENCLOSURE

A1.0 | A1.0 SCALE: 3/4" = 1'-0"

COPYRIGHT © 2018 BAALMAN ARCHITECTS

BAALMAN ARCHITECTS
#2 Daniel Drive
O'Fallon, MO 63366
ph: 314.640.6212

Michael J. Baalman
ARCHITECT
License#: A-2012004035
Certificate of Authority: 2014003655

STRUCTURAL
AEDIFICA CASE ENGINEERING
796 MERUS COURT
ST. LOUIS, MO 63026
CONTACT: STEVE SACCO, P.E.
PHONE: 636-349-1600

MECHANCIAL, PLUMBING, ELECTRICAL AND FIRE PROTECTION SYSTEMS
G&W ENGINEERING
138 WELDON PKWY
MARYLAND HEIGHTS, MO 63043
CONTACT: KEVIN GRIESEMER
PHONE: 314-469-3737

New Restaurant, Banquet Center & Corporate Offices at The Junction for:
Sugarfire Smoke House
600 West Main
Wentzville, Missouri 63385

DATE	ISSUE	R#
6-15-18	Bid & Permit Issue	
6-27-18	Addendum No 1	

Michael J. Baalman
ARCHITECT

PROJECT MANAGER: MJB
DRAWN BY: JKL

PROJECT NUMBER
16-076
DATE
June 15, 2018

SHEET
A1.0
ARCHITECTURAL SITE PLAN

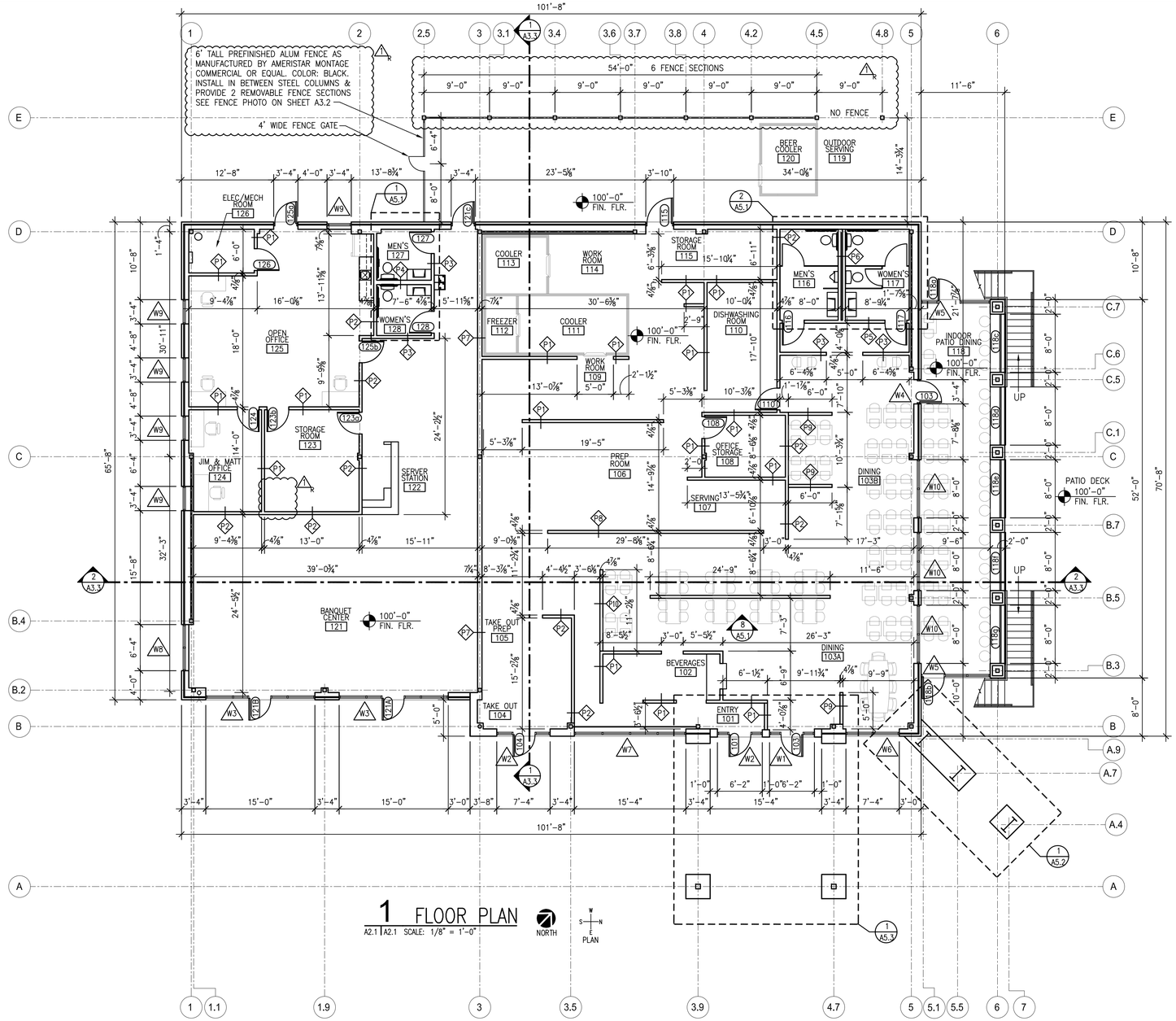

1 FLOOR PLAN

A2.1 | A2.1 SCALE: 1/8" = 1'-0"

NORTH

PLAN

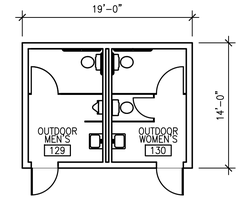

REFER TO SHEET A5.7 FOR DETAILED PLANS & ELEVATIONS

2 OUTDOOR RESTROOM PLAN

A5.7 | A2.1 SCALE: 1/8" = 1'-0"

NORTH

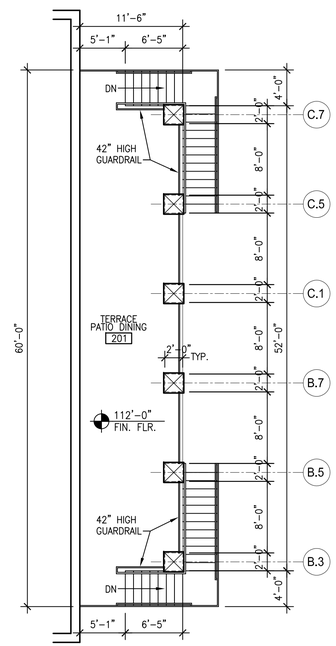

3 TERRACE FLOOR PLAN

A2.1 | A2.1 SCALE: 1/8" = 1'-0"

NORTH

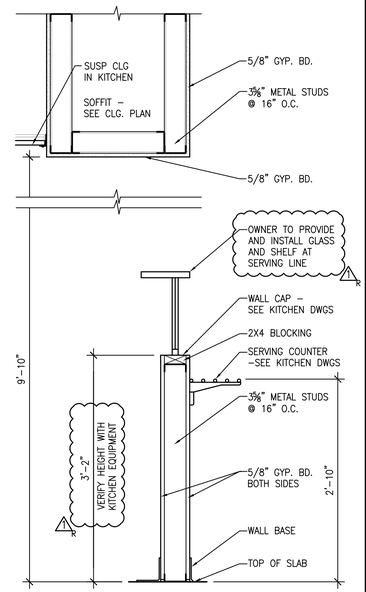

P8 SECTION AT SERVING LINE

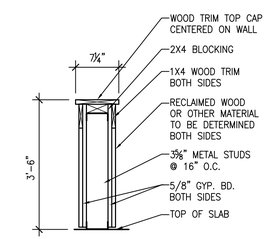

P9 SHORT WALL WITH CAP

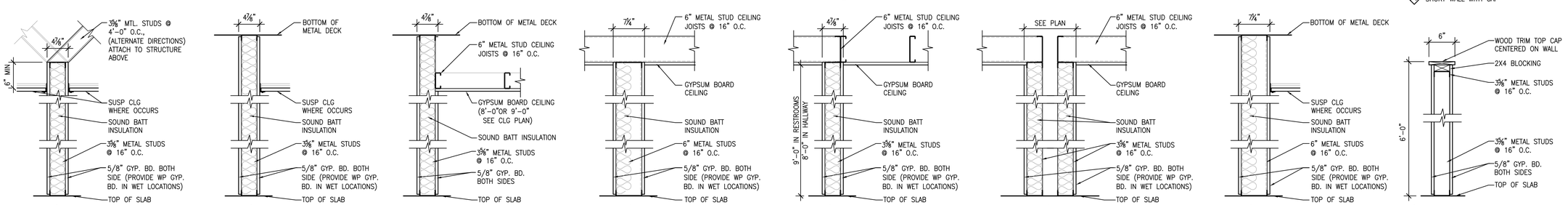

4 PARTITION TYPES

A2.1 | A2.1 SCALE: 1" = 1'-0"

COPYRIGHT © 2018 BAALMAN ARCHITECTS

BAALMAN ARCHITECTS
#2 Daniel Drive
O'Fallon, MO 63366
ph: 314.640.6212

Michael J. Baalman
ARCHITECT
License#: A-2012004035
Certificate of Authority: 2014003655

STRUCTURAL
AEDIFICA CASE ENGINEERING
796 MERUS COURT
ST. LOUIS, MO 63026
CONTACT: STEVE SACCO, P.E.
PHONE: 636-349-1600

MECHANCIAL, PLUMBING, ELECTRICAL AND FIRE PROTECTION SYSTEMS
G&W ENGINEERING
138 WELDON PKWY
MARYLAND HEIGHTS, MO 63043
CONTACT: KEVIN GRIESEMER
PHONE: 314-469-3737

New Restaurant, Banquet Center & Corporate Offices at The Junction for:
Sugarfire Smoke House
600 West Main
Wentzville, Missouri 63385

DATE	ISSUE	R#
6-15-18	Bid & Permit Issue	
6-27-18	Addendum No 1	1

Michael J. Baalman
ARCHITECT

PROJECT MANAGER: MJB
DRAWN BY: JKL

PROJECT NUMBER
16-076
DATE
June 15, 2018

SHEET
A2.1
FLOOR PLAN & PARTITION TYPES

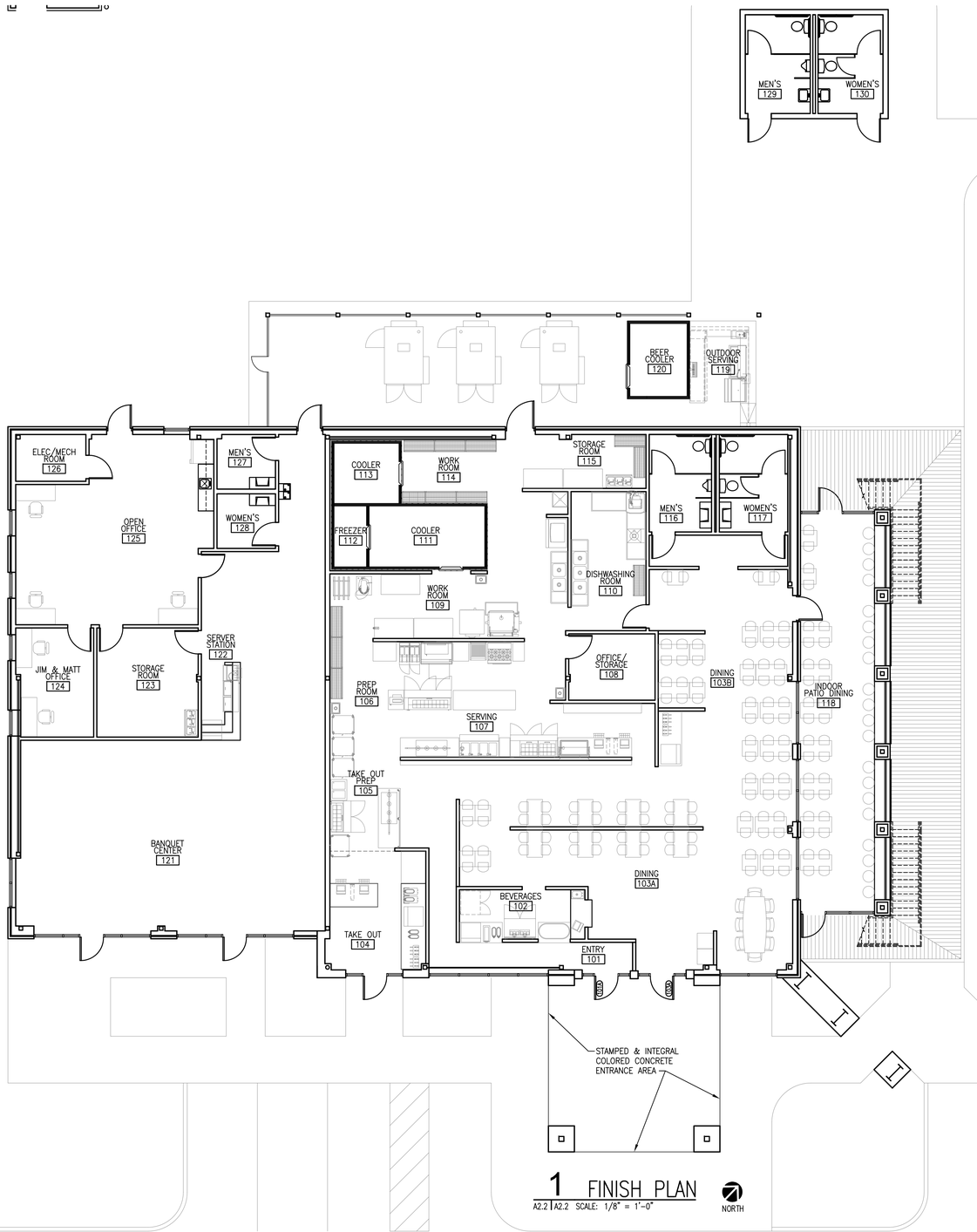

1 FINISH PLAN
A2.2 | A2.2 SCALE: 1/8" = 1'-0"

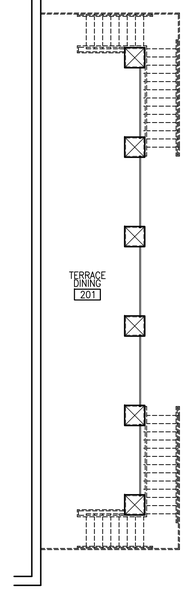

2 TERRACE FINISH PLAN
A2.2 | A2.2 SCALE: 1/8" = 1'-0"

ROOM FINISH SCHEDULE

ROOM NO.	ROOM NAME	FLOOR	BASE	WALLS NORTH	WALLS EAST	WALLS SOUTH	WALLS WEST	CEILING MAT'L	CEILING HEIGHT	DECORATING WALLS	DECORATING CLG	REMARKS:
101	ENTRY	GPC	WB	GYP BD	GYP BD	GYPBD / GLASS	GYP BD	EXP	OPEN			1x6 BASE BOARDS
102	BEVERAGES	GPC	WB	GYPBD / GLASS	GYPBD / GLASS	GYPBD / GLASS	GYP BD	EXP	9'-0"			1x6 BASE BOARDS
103A	DINING	GPC	WB	GYPBD / GLASS	GYPBD / GLASS	GYPBD / GLASS	GYP BD	EXP	OPEN			1x6 BASE BOARDS
103B	DINING	GPC	WB	BD / GLASS	BD / GLASS	GYPBD / GLASS	GYP BD	EXP	OPEN			1x6 BASE BOARDS
104	TAKE OUT	GPC	WB	GYPBD / FRP	GYP BD	GYPBD / GLASS	GYP BD	EXP	OPEN			1x6 BASE BOARDS
105	TAKE OUT PREP	GPC	VB	GYPBD / FRP	GYP BD	GYPBD / GLASS	GYPBD / FRP	VCG	10'-0"			
106	PREP ROOM	GPC	VB	GYPBD / FRP	GYP BD	GYPBD / FRP	GYPBD / FRP	VCG	10'-0"			
107	SERVING	GPC	VB	GYPBD / FRP	GYP BD	GYPBD / FRP	GYPBD / FRP	VCG	10'-0"			
108	OFFICE & STORAGE	GPC	VB	GYP BD	GYP BD	GYP BD	GYP BD	VCG	10'-0"			
109	WORK ROOM	GPC	VB	GYPBD / FRP	FRP	FRP	GYPBD / FRP	VCG	10'-0"			
110	DISHWASHING ROOM	GPC	VB	FRP	FRP	GYP BD	FRP	VCG	10'-0"			
111	COOLER	–	–	–	–	–	–	VCG	10'-0"			VCG CLG ABOVE COOLER
112	FREEZER	–	–	–	–	–	–	VCG	10'-0"			VCG CLG ABOVE FREEZER
113	COOLER	–	–	–	–	–	–	VCG	10'-0"			VCG CLG ABOVE COOLER
114	WORK ROOM	GPC	VB	GYP BD	–	FRP	–	VCG	10'-0"			
115	STORAGE ROOM	GPC	VB	GYP BD	FRP	FRP	–	VCG	10'-0"			
116	MEN'S RESTROOM	GPC	VB	GYPBD / PT	GYPBD / PT	GYPBD / PT	GYPBD / PT	GYP BD	9'-0"		9'-0" PT	CONCRETE SINK
117	WOMEN'S RESTROOM	GPC	VB	GYPBD / PT	GYPBD / PT	GYPBD / PT	GYPBD / PT	GYP BD	9'-0"		9'-0" PT	CONCRETE SINK
118	PATIO DINING	GPC	WB	EXP / GLASS	EXP / VB	EXP / GLASS	GYPBD / GLASS	EXP	OPEN			1x6 BASE BOARDS
119	OUTDOOR SERVING	SC	WB	EXP / GLASS	EXP	GYPBD / GLASS	EXP / GLASS	EXP	OPEN			1x6 BASE BOARDS
120	BEER COOLER	–	–	–	–	–	–	–	–			
121	BANQUET CENTER	GPC	WB	GYP BD	GYP BD	GYPBD / GLASS	GYPBD / GLASS	EXP	OPEN			1x6 BASE BOARDS
122	SERVER STATION	GPC	WB	GYP BD	GYP BD	GYP BD	GYP BD	EXP	OPEN			1x6 BASE BOARDS
123	STORAGE ROOM	SC	VB	GYP BD	GYP BD	GYP BD	GYP BD	EXP	OPEN			
124	JIM & MATT OFFICE	CPT	VB	GYP BD	GYP BD	GYP BD	GYPBD / GLASS	ACT	10'-0"			
125	OPEN OFFICE	CPT	VB	GYPBD / GLASS	GYP BD	GYP BD	GYPBD / GLASS	ACT	10'-0"			
126	ELEC./MECH. ROOM	GPC	VB	GYP BD	GYP BD	GYP BD	GYP BD	EXP	OPEN			
127	MEN'S RESTROOM	GPC	PT	GYPBD / PT	GYPBD / PT	GYPBD / PT	GYPBD / PT	GYP BD	9'-0"		9'-0" PT	CONCRETE SINK
128	WOMEN'S RESTROOM	GPC	PT	GYPBD / PT	GYPBD / PT	GYPBD / PT	GYPBD / PT	GYP BD	9'-0"		9'-0" PT	CONCRETE SINK
129	OUTDOOR MEN'S RESTROOM	SC	VB	GYP BD	GYP BD	GYP BD	GYP BD	GYP BD	9'-0"			
130	OUTDOOR WOMEN'S RESTROOM	SC	VB	GYP BD	GYP BD	GYP BD	GYP BD	GYP BD	9'-0"			
201	TERRACE DINING PATIO	SC	–	–	–	–	BRICK	–	–			

REMARKS:
1. PROVIDE GROUND POLISHED CONCRETE PER SPECIFICATIONS.
2. PROVIDE HIGH SCRUB RATED PAINTED WALLS.
3. PROVIDE WASHABLE VINYL COATED GYPSUM BOARD ACOUSTICAL CEILING TILES.
4. PROVIDE CONCRETE SINKS – COLOR: LIMESTONE

ABBREVIATIONS:

SC	EXPOSED SEALED CONCRETE	PT	PORCELAIN TILE
ACT	ACOUSTICAL CEILING TILES & GRID	FRP	FIBER REINFORCED PLASTIC PANELS
GL	GLASS	VB	VINYL WALL BASE
EXP	EXPOSED STRUCTURE, PAINTED	GPC	GROUND POLISHED CONCRETE
GB	GYPSUM BOARD	WB	WOOD BASE
P	PAINT	VCG	VINYL COATED GYP CEILING
CPT	CARPET TILE		

GROUND POLISHED CONCRETE SPECTIFICATIONS:

1. GRIND FLOOR WITH 30 GRIT DIAMONDS.
2. FILL ALL THE JOINTS, CHIPS & CRACKS.
3. DENSIFY (CHEMICAL HARDENER) THE CONCRETE.
4. GRIND FLOOR WITH 70 GRIT DIAMONDS.
5. GRIND FLOOR WITH 100 GRIT DIAMONDS.
6. START POLISHING 200 GRIT COMPLETE.
7. POLISH WITH 400 GRIT COMPOSITE.
8. POLISH WITH 800 GRIT COMPOSITE.
9. POLISH WITH 1500 GRIT COMPOSITE. (KITCHEN POLISH STOPS AT THIS STAGE).
10. POLISH WITH 3000 GRIT COMPOSITE.
11. SEAL THE FLOOR AT THIS STAGE.
12. HIGH SPEED BURNISH FLOOR.

BAALMAN ARCHITECTS
#2 Daniel Drive
O'Fallon, MO 63366
ph: 314.640.6212

Michael J. Baalman
ARCHITECT
License#: A-2012004035
Certificate of Authority:
2014003655

STRUCTURAL
AEDIFICA CASE ENGINEERING
796 MERUS COURT
ST. LOUIS, MO 63026
CONTACT: STEVE SACCO, P.E.
PHONE: 636-349-1600

MECHANCIAL, PLUMBING, ELECTRICAL AND FIRE PROTECTION SYSTEMS
G&W ENGINEERING
138 WELDON PKWY
MARYLAND HEIGHTS, MO 63043
CONTACT: KEVIN GRIESEMER
PHONE: 314-469-3737

New Restaurant, Banquet Center & Corporate Offices at The Junction for:
Sugarfire Smoke House
600 West Main
Wentzville, Missouri 63385

DATE	ISSUE	R#
6-15-18	Bid & Permit Issue	
6-27-18	Addendum No. 1	1

Michael J. Baalman
ARCHITECT

PROJECT MANAGER: MJB
DRAWN BY: JKL

PROJECT NUMBER
16-076
DATE
June 15, 2018

SHEET
A2.2
FINISH FLOOR PLAN & ROOM FINISH SCHEDULE

COPYRIGHT © 2018 BAALMAN ARCHITECTS

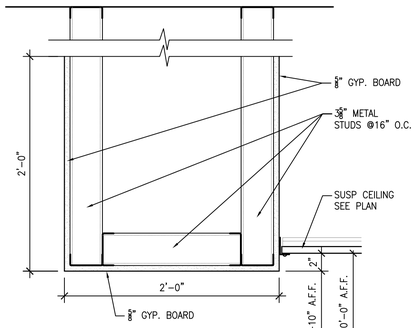

2 SOFFIT DETAIL

A2.3 | A2.3 SCALE: 1-1/2" = 1'-0"

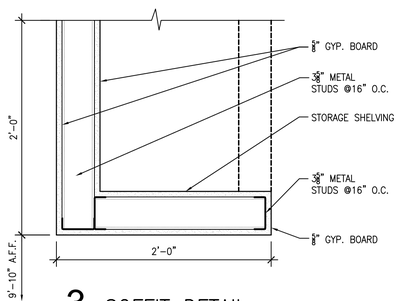

3 SOFFIT DETAIL

A2.3 | A2.3 SCALE: 1-1/2" = 1'-0"

NOTE: VERIFY SOFFIT/SHELF DETAIL WITH OWNER

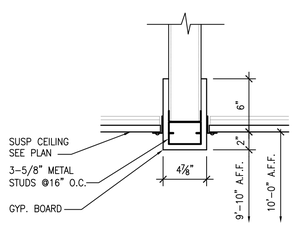

4 BULKHEAD DETAIL

A2.3 | A2.3 SCALE: 1-1/2" = 1'-0"

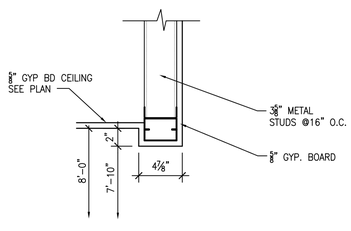

5 BULKHEAD DETAIL

A2.3 | A2.3 SCALE: 1-1/2" = 1'-0"

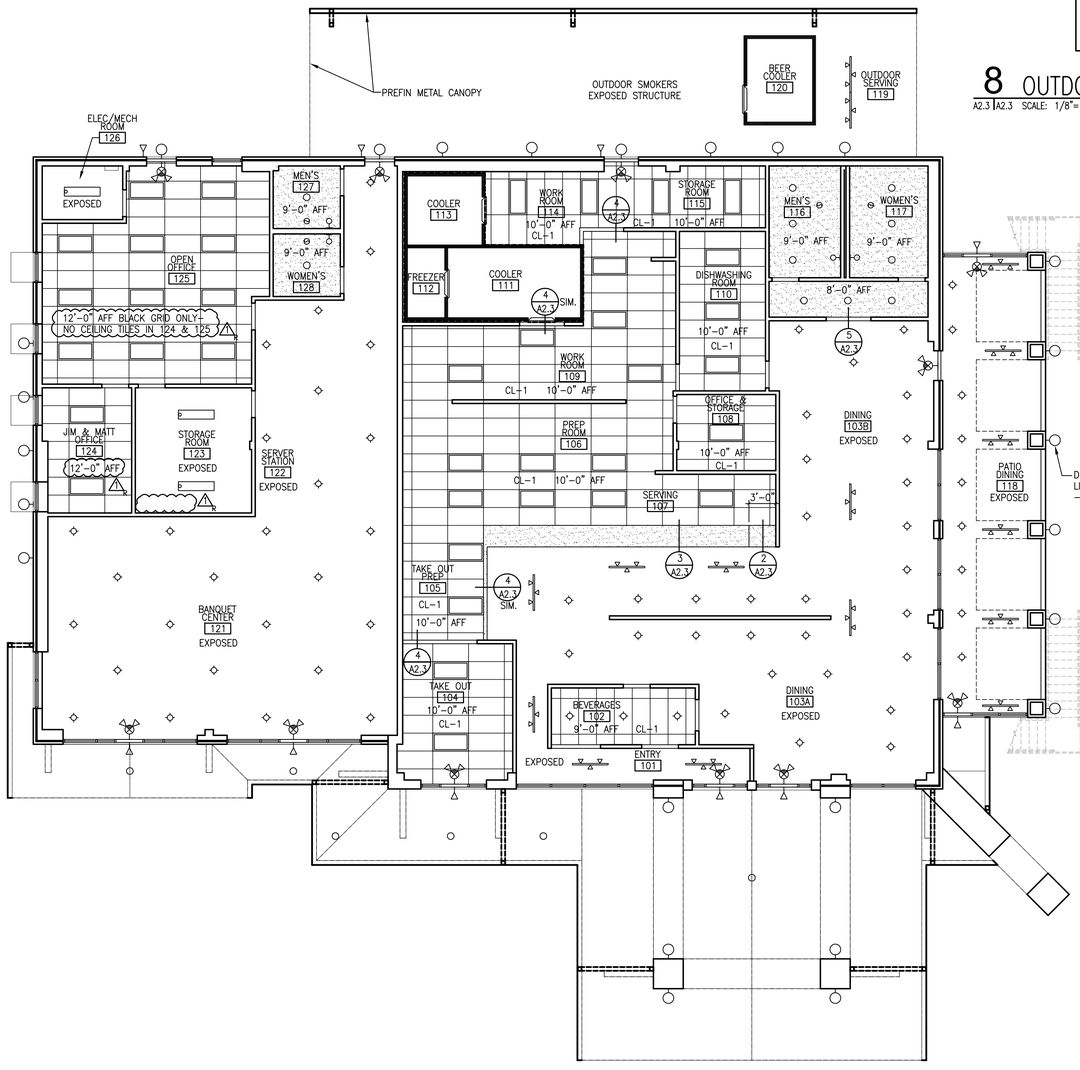

1 REFLECTED CEILING PLAN

A2.3 | A2.3 SCALE: 1/8"=1'-0"

NORTH

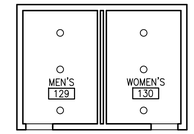

8 OUTDOOR RESTROOM CLG. PLAN

A2.3 | A2.3 SCALE: 1/8"=1'-0"

NORTH

9 TERRACE LIGHTING PLAN

A2.3 | A2.3 SCALE: 1/8"=1'-0"

NORTH

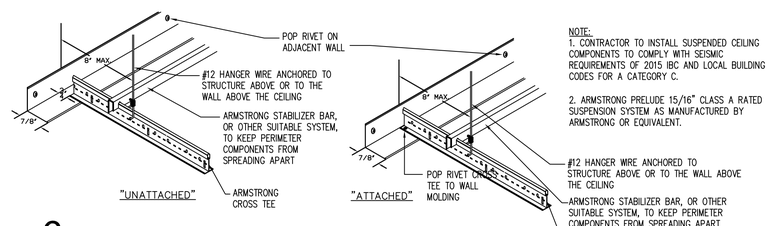

NOTE:
1. CONTRACTOR TO INSTALL SUSPENDED CEILING COMPONENTS TO COMPLY WITH SEISMIC REQUIREMENTS OF 2015 IBC AND LOCAL BUILDING CODES FOR A CATEGORY C.

2. ARMSTRONG PRELUDE 15/16" CLASS A RATED SUSPENSION SYSTEM AS MANUFACTURED BY ARMSTRONG OR EQUIVALENT.

6 TYP. SUSP. CLG. INSTALLATION DETAIL

A2.3 | A2.3 SCALE: N.T.S

CATEGORY C

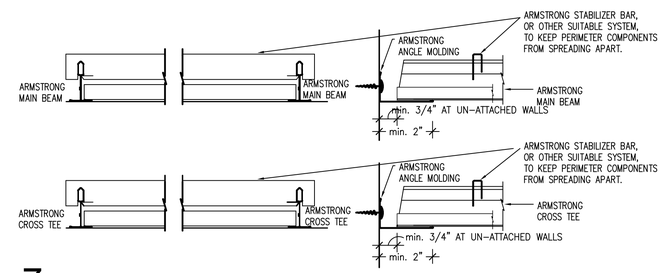

7 TYP. SUSP. CLG. INSTALLATION DETAIL

A2.3 | A2.3 SCALE: N.T.S

CATEGORY C

GENERAL NOTES:

1. LIGHT FIXTURES ARE SHOWN FOR REFERENCE AND TO SHOW DESIGN INTENT. REFER TO DESIGN/BUILD ELECTRICAL DRAWINGS FOR ACTUAL FIXTURE TYPES AND LOCATIONS.
2. CONTRACTOR TO COORDINATE ALL FIXTURE LOCATIONS WITH ALL OTHER CEILING MOUNTED ITEMS, ETC.
3. REFER TO ROOM FINISH SCHEDULE FOR CEILING HEIGHTS, ETC.
4. ALL EXPOSED CEILING COMPONENTS TO BE PAINTED IN EXPOSED CEILING AREA (IE. ELECTRICAL CONDUITS, ETC.)
5. PROVIDE AND INSTALL BLACK CEILING GRID IN ROOMS 124 AND 125. NO CEILING TILE. CEILING GRID HEIGHT TO BE 12'-0".

SYMBOLS LEGEND:

- CL-1 — 2'X4' SUSPENDED CEILING GRID WITH VINYL COATED SHEETROCK TILES, BY ARMSTRONG OR EQUAL
- CL-2 — 2'X4' SUSPENDED ACOUSTICAL CLG GRID WITH 2'X2' SECOND LOOK DUNE TILES, TEGULAR EDGE, BY ARMSTRONG OR EQUAL
- GYP. BOARD CEILING
- 2'x4' SURFACE MOUNTED LED LIGHT FIXTURE
- TRACK LIGHTING FIXTURE
- CEILING LIGHT FIXTURE
- RECESSED CEILING LIGHT FIXTURE
- SURFACE MOUNTED RESTROOM LIGHT FIXTURE
- SURFACE MOUNTED EXTERIOR LIGHT FIXTURE
- STRIP LIGHT FIXTURE
- EXHAUST FAN
- EMERGENCY EXIT LIGHT & HEADS (90 MIN. BATTERY BACK-UP)
- EMERGENCY EXIT SIGN (90 MIN. BATTERY BACK-UP)
- EMERGENCY EXIT REMOTE LIGHT HEAD (90 MIN. BATTERY BACK-UP)

1. PROVIDE EMERGENCY ILLUMINATION MIN. AVE 1 FOOT CANDLE AND MIN. .1 FOOT CANDLE AT PATH OF EGRESS (2015 IBC)
2. INSTALL SUSPENDED CEILING GRID SYSTEM PER MANUFACTURER RECOMMENDATIONS FOR SEISMIC CATEGORY LISTED IN SOILS REPORT.
3. VERIFY ALL ELECTRICAL AND LIGHTING REQUIREMENTS WITH OWNER PRIOR TO BIDDING AND CONSTRUCTION.

BAALMAN ARCHITECTS
#2 Daniel Drive
O'Fallon, MO 63366
ph: 314.640.6212

Michael J. Baalman
ARCHITECT
License#: A-2012004035
Certificate of Authority: 2014003655

STRUCTURAL
AEDIFICA CASE ENGINEERING
796 MERUS COURT
ST. LOUIS, MO 63026
CONTACT: STEVE SACCO, P.E.
PHONE: 636-349-1600

MECHANCIAL, PLUMBING, ELECTRICAL AND FIRE PROTECTION SYSTEMS
G&W ENGINEERING
138 WELDON PKWY
MARYLAND HEIGHTS, MO 63043
CONTACT: KEVIN GRIESEMER
PHONE: 314-469-3737

New Restaurant, Banquet Center & Corporate Offices at The Junction for:

Sugarfire Smoke House

600 West Main
Wentzville, Missouri 63385

DATE	ISSUE	R#
6-15-18	Owner & Bid Set	
6-27-18	Addendum No 1	1

Michael J. Baalman
ARCHITECT

PROJECT MANAGER: MJB
DRAWN BY: JKL

PROJECT NUMBER
16-076
DATE
June 15, 2018

SHEET
A2.3
REFLECTED CEILING PLAN & DETAILS

COPYRIGHT © 2018 BAALMAN ARCHITECTS

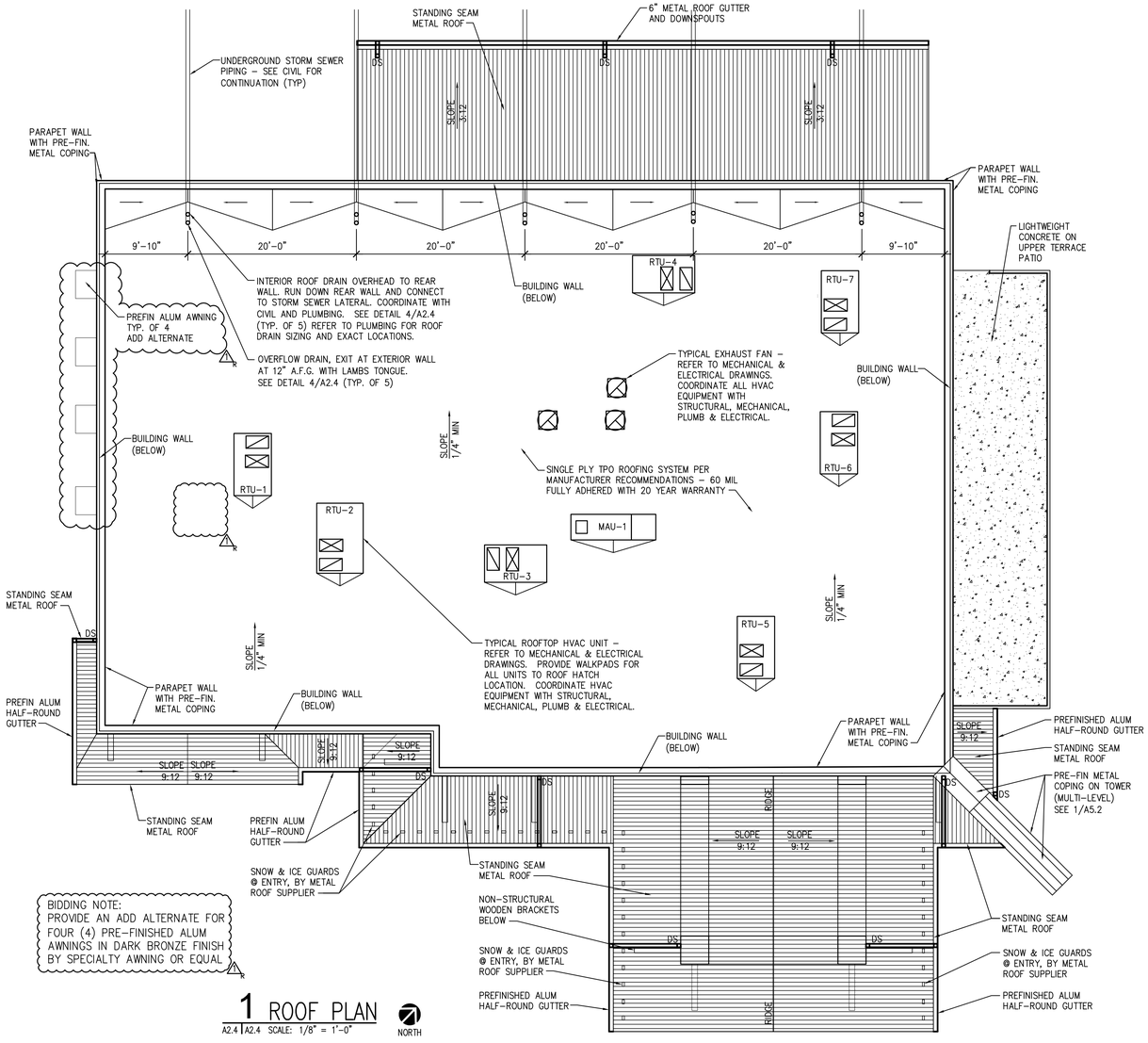

BIDDING NOTE:
PROVIDE AN ADD ALTERNATE FOR FOUR (4) PRE-FINISHED ALUM AWNINGS IN DARK BRONZE FINISH BY SPECIALTY AWNING OR EQUAL

1 ROOF PLAN

A2.4 | A2.4 SCALE: 1/8" = 1'-0"

NORTH

2 NOT USED

A2.4 | A2.4 SCALE: 1" = 1'-0"

3 NOT USED

A2.4 | A2.4 SCALE: 1" = 1'-0"

GENERAL NOTES:

1. COORDINATE MECHANICAL, PLUMBING, ELECTRICAL AND FIRE PROTECTION EQUIPMENT SYSTEMS WITH ARCHITECTURAL AND STRUCTURAL DRAWINGS.
2. INSTALLATION OF ALL ROOFING COMPONENTS, ACCESSORIES, ETC... SHALL BE INSTALLED IN A MANNER WHICH PROVIDES POSITIVE DRAINAGE TO THE ROOF DRAINS, GUTTER & DOWN SPOUTS – NO WATER PONDING ALLOWED.
3. SHEET METAL CONTRACTOR SHALL PROVIDE DETAILED SHOP DRAWING OF GUTTER BOX, DOWNSPOUTS AND FLASHINGS FOR REVIEW AND APPROVAL BY THE ARCHITECT PRIOR TO FABRICATION AND INSTALLATION.
4. PROVIDE SINGLE PLY MEMBRANE FLASHING OVER ALL WOOD CURBS AND TOP WITH PRE-FINISHED METAL CAP.
5. ROOFING CONTRACTOR TO FLASH AND SEAL ALL ROOF PENETRATIONS ACCORDING TO ROOFING SPECIFICATIONS AND WARRANTIES.
6. COORDINATE ROOF HATCH AND ROOF TOP UNIT SIZES AND LOCATIONS WITH MECHANICAL & STRUCTURAL PLANS.
7. SEE MECHANICAL AND PLUMBING DRAWINGS FOR ACTUAL ROOF PENETRATIONS AND LOCATIONS.
8. COORDINATE ROOFTOP UNITS WITH STRUCTURAL DRAWINGS FOR MOUNTING AND SUPPORT.
9. ALL ROOF DRAINS ARE TO CONNECT TO STORM SEWER. COORDINATE WITH CIVIL AND PLUMBING DRAWINGS.

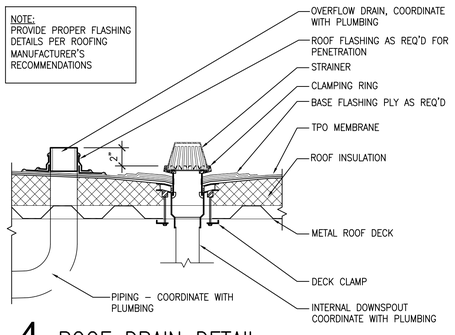

4 ROOF DRAIN DETAIL

A2.4 | A2.4 SCALE: 1 1/2" = 1'-0"

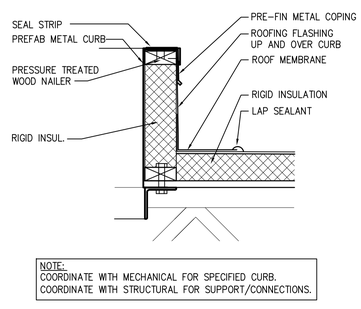

5 ROOF CURB DETAIL

A2.4 | A2.4 SCALE: 1 1/2" = 1'-0"

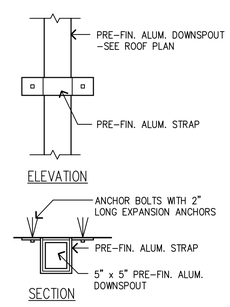

6 DETAIL at DOWNSPOUT

A2.4 | A2.4 SCALE: 1 1/2" = 1'-0"

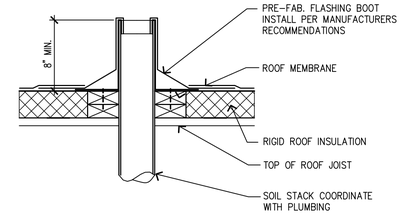

7 TYP SOIL STACK DETAIL

A2.4 | A2.4 SCALE: 1 1/2" = 1'-0"

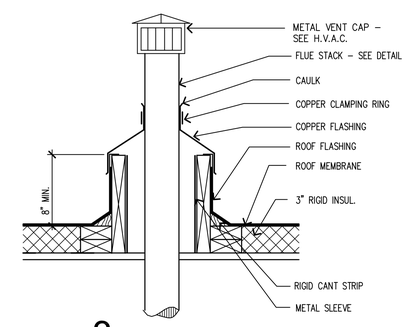

8 FLUE DETAIL

A2.4 | A2.4 SCALE: 1 1/2" = 1'-0"

COPYRIGHT © 2018 BAALMAN ARCHITECTS

BAALMAN ARCHITECTS
#2 Daniel Drive
O'Fallon, MO 63366
ph: 314.640.6212

Michael J. Baalman
ARCHITECT
License#: A-2012004035
Certificate of Authority: 2014003655

STRUCTURAL
AEDIFICA CASE ENGINEERING
796 MERUS COURT
ST. LOUIS, MO 63026
CONTACT: STEVE SACCO, P.E.
PHONE: 636-349-1600

MECHANCIAL, PLUMBING, ELECTRICAL AND FIRE PROTECTION SYSTEMS
G&W ENGINEERING
138 WELDON PKWY
MARYLAND HEIGHTS, MO 63043
CONTACT: KEVIN GRIESEMER
PHONE: 314-469-3737

New Restaurant, Banquet Center & Corporate Offices at The Junction for:
Sugarfire Smoke House
600 West Main
Wentzville, Missouri 63385

DATE	ISSUE	R#
6-15-18	Bid & Permit Issue	
6-27-18	Addendum No 1	1

Michael J. Baalman
ARCHITECT

PROJECT MANAGER: MJB
DRAWN BY: JKL

PROJECT NUMBER
16-076
DATE
June 15, 2018

SHEET
A2.4
ROOF PLAN & DETAILS

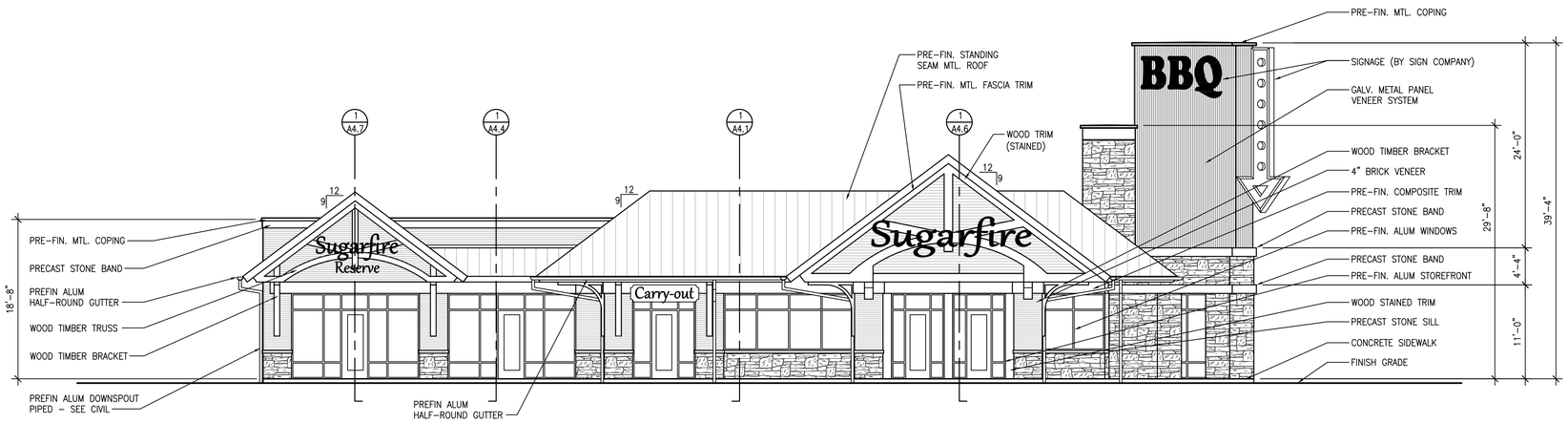

1 FRONT (EAST) ELEVATION

A3.1 | A3.1 SCALE: 1/8" = 1'-0"

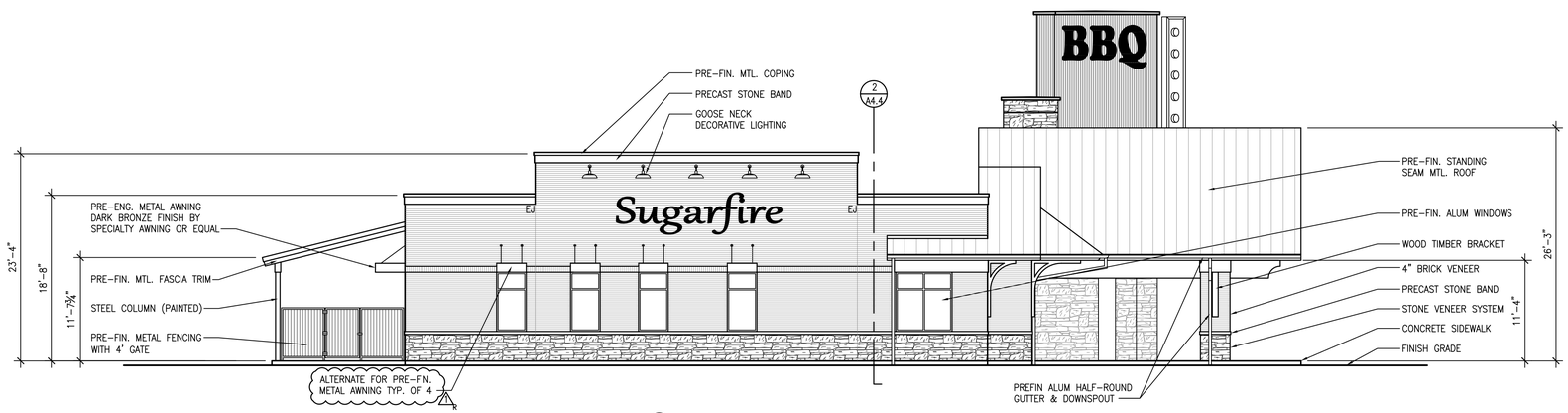

2 LEFT SIDE (SOUTH) ELEVATION

A3.1 | A3.1 SCALE: 1/8" = 1'-0"

BIDDING NOTE:
PROVIDE AN ADD ALTERNATE FOR FOUR (4) PRE-FINISHED ALUM AWNINGS IN DARK BRONZE FINISH BY SPECIALTY AWNING OR EQUAL

EXTERIOR MATERIALS AND FINISH SCHEDULE:

A. BRICK AS MANUFACTURED FROM CLOUD CERAMICS AND SIOUX CITY BRICK, AND PROVIDED BY MIDWEST BRICK AND BLOCK.
A.1. FIELD BRICK – CLOUD CERAMICS, CHEROKEE MODULAR BLEND, AND VELOUR.
A.2. ACCENT BRICK – SOLDIER COURSE SIOUX CITY BRICK AND BLACK HILLS SMOOTH.
A.3. NATURAL MORTAR COLOR FOR ALL BRICK.

B. STONE VENEER AS MANUFACTURED BY ELDORADO STONE. INSTALL PER MANUFACTURER'S RECOMMENDATIONS AND MASONRY VENEER MANUFACTURERS ASSOCIATION (MVMA). PRODUCT LINE IS LIMESTONE. COLOR TO BE YORK. PROVIDE THE SAME STONE PRODUCT AT THE COLUMN AND PILASTER BASES. SAMPLES; MONTICELLO CLIFFSTONE, MINERET BLUFFSTONE, PRESCOTT BLUFFSTONE

C. PRECAST STONE BAND TO BE LIMESTONE – NATURAL COLOR – CALIBER CASTSTONE

D. STANDING SEAM METAL ROOFING AS MANUFACTURED BY FIRESTONE BUILDING PRODUCTS OR EQUIVALENT. PROVIDE AND INSTALL A WARRANTED UNA-CLAD UC-3 PANEL ROOFING SYSTEM COMPLETE WITH CLAD-GARD UNDERLAYMENT, INSULATION, SNOW & ICE GUARDS AS RECOMMENDED BY THE MANUFACTURER FOR A COMPLETE WEATHERTIGHT SYSTEM WITH A 20 YEAR WARRANTY. METAL ROOF COLOR – CHARCOAL GRAY.

E. PRE-FINISHED ALUMINUM DOORS, STOREFRONT AND WINDOWS TO BE DARK BRONZE ANODIZED. ALL EXTERIOR GLAZING SHALL BE "CLEAR" GLASS AS THE "BASE BID". PROVIDE "SOLAR BRONZE" GLASS AS AN ALTERNATE. SEE SHEET A6.1

F. TOWER ELEMENT – RUSTED OXIDIZE NEW MATERIAL DISTRESSED CORREGATED METAL (COULD BE ROOF DECK MATERIAL)

G. EXPOSED WOOD – COLOR & MATERIAL: CEDAR OR REDWOOD #2 KNOTTY

H. PREFINISHED METAL HALF-ROUND GUTTERS AND DOWNSPOUTS TO BE DARK BRONZE FINISH. ALL DOWNSPOUTS ARE TO BE CONNECTED TO STORM SEWER. SEE CIVIL DRAWINGS.

EJ = EXPANSION JOINT – SEALANTS USED SHALL BE IN ACCORDANCE WITH ASTM C 920

BAALMAN ARCHITECTS
#2 Daniel Drive
O'Fallon, MO 63366
ph: 314.640.6212

Michael J. Baalman
ARCHITECT
License#: A-2012004035
Certificate of Authority: 2014003655

STRUCTURAL
AEDIFICA CASE ENGINEERING
796 MERUS COURT
ST. LOUIS, MO 63026
CONTACT: STEVE SACCO, P.E.
PHONE: 636-349-1600

MECHANCIAL, PLUMBING, ELECTRICAL AND FIRE PROTECTION SYSTEMS
G&W ENGINEERING
138 WELDON PKWY
MARYLAND HEIGHTS, MO 63043
CONTACT: KEVIN GRIESEMER
PHONE: 314-469-3737

New Restaurant, Banquet Center & Corporate Offices at The Junction for:
Sugarfire Smoke House
600 West Main
Wentzville, Missouri 63385

DATE	ISSUE	R#
6-15-18	Bid & Permit Issue	
6-27-18	Addendum No 1	1

Michael J. Baalman
ARCHITECT

PROJECT MANAGER: MJB
DRAWN BY: JKL

PROJECT NUMBER
16-076
DATE
June 15, 2018

SHEET
A3.1
ELEVATIONS

COPYRIGHT © 2018 BAALMAN ARCHITECTS

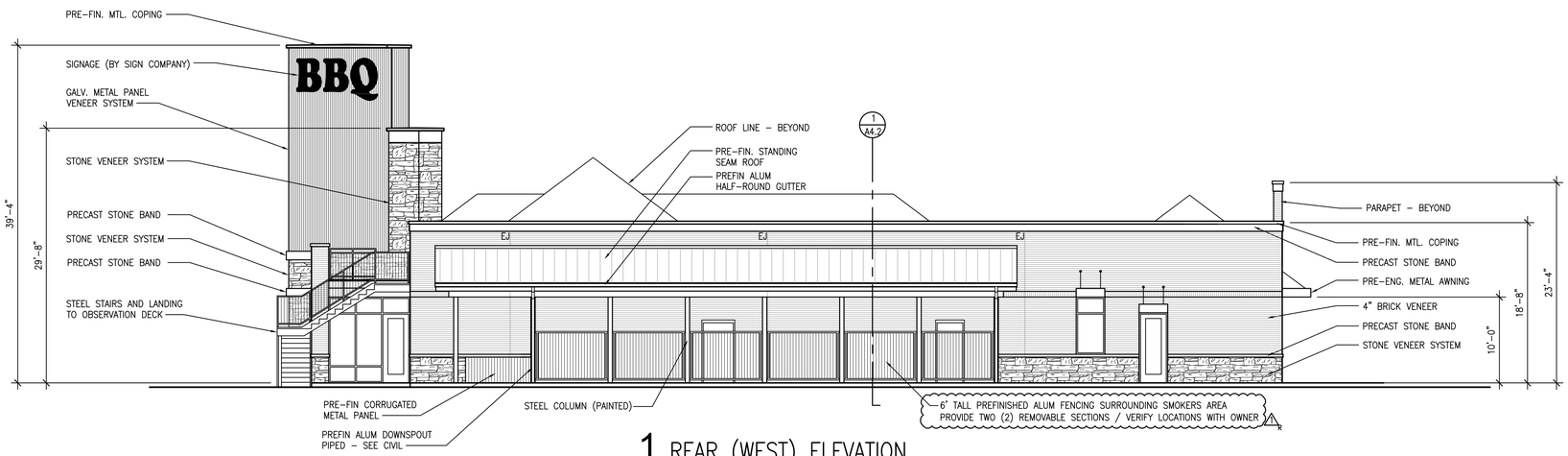

1 REAR (WEST) ELEVATION

A3.2 | A3.2 SCALE: 1/8" = 1'-0"

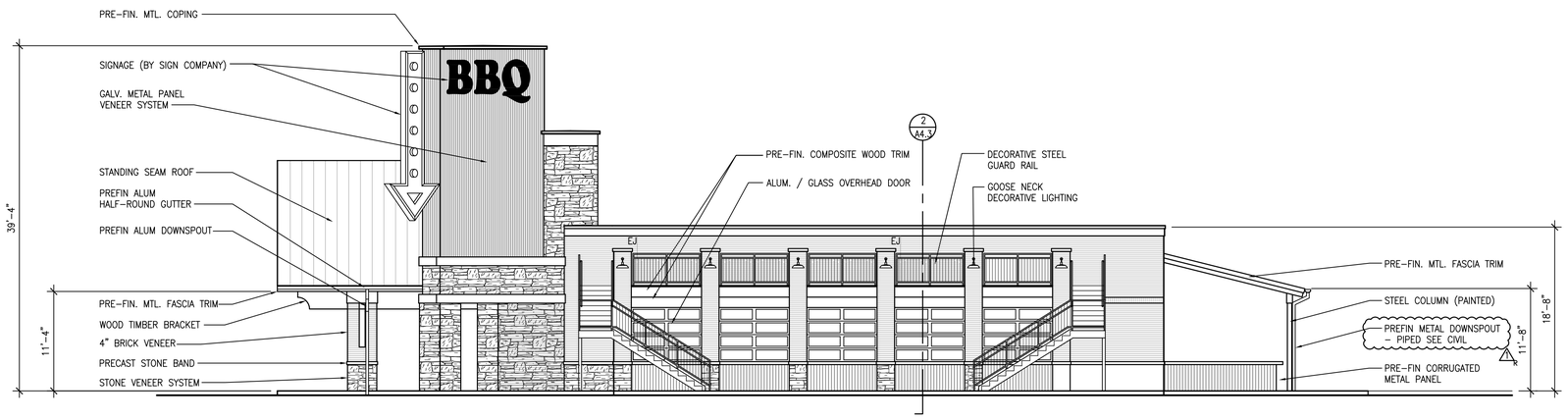

2 RIGHT SIDE (NORTH) ELEVATION

A3.2 | A3.2 SCALE: 1/8" = 1'-0"

3 ALUMINUM FENCE EXAMPLE

A3.2 | A3.2 SCALE: NONE

COPYRIGHT © 2018 BAALMAN ARCHITECTS

BAALMAN ARCHITECTS

#2 Daniel Drive
O'Fallon, MO 63366
ph: 314.640.6212

Michael J. Baalman
ARCHITECT
License#: A-2012004035
Certificate of Authority:
2014003655

STRUCTURAL
AEDIFICA CASE ENGINEERING
796 MERUS COURT
ST. LOUIS, MO 63026
CONTACT: STEVE SACCO, P.E.
PHONE: 636-349-1600

MECHANCIAL, PLUMBING, ELECTRICAL AND FIRE PROTECTION SYSTEMS
G&W ENGINEERING
138 WELDON PKWY
MARYLAND HEIGHTS, MO 63043
CONTACT: KEVIN GRIESEMER
PHONE: 314-469-3737

New Restaurant, Banquet Center
& Corporate Offices at The Junction for:
Sugarfire Smoke House
600 West Main
Wentzville, Missouri 63385

DATE	ISSUE	R#
6-15-18	Bid & Permit Issue	
6-27-18	Addendum No 1	1

Michael J. Baalman
ARCHITECT

PROJECT MANAGER: MJB
DRAWN BY: JKL

PROJECT NUMBER
16-076
DATE
June 15, 2018

SHEET
A3.2
ELEVATIONS

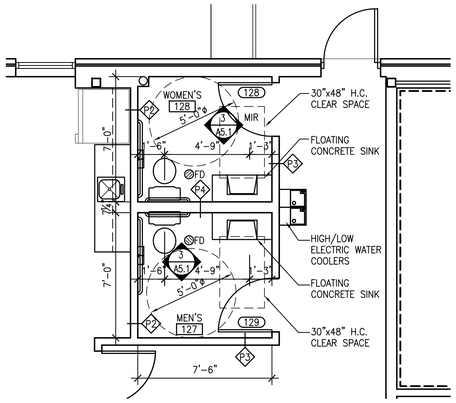

1 ENLARGED FLOOR PLAN

A5.1 | A5.1 SCALE: 1/4" = 1'-0"

NORTH

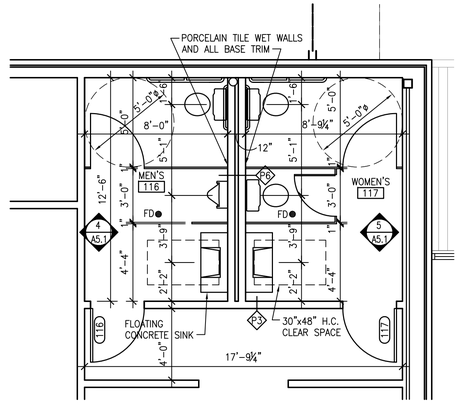

2 ENLARGED FLOOR PLAN

A5.1 | A5.1 SCALE: 1/4" = 1'-0"

NORTH

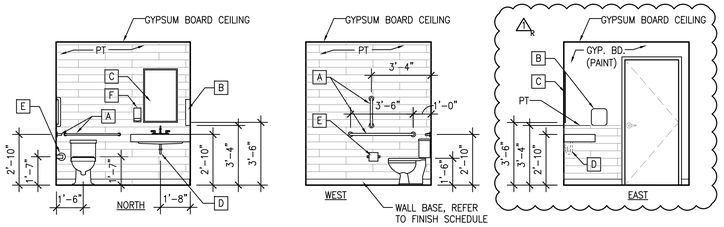

3 TOILET ELEVATIONS @ RESTROOM 127

A5.1 | A5.1 SCALE: 1/4"=1'-0"

RESTROOM 128 MIRRORED

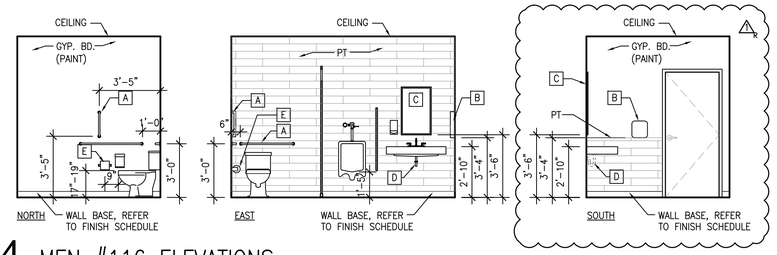

4 MEN #116 ELEVATIONS

A5.1 | A5.1 SCALE: 1/4" = 1'-0"

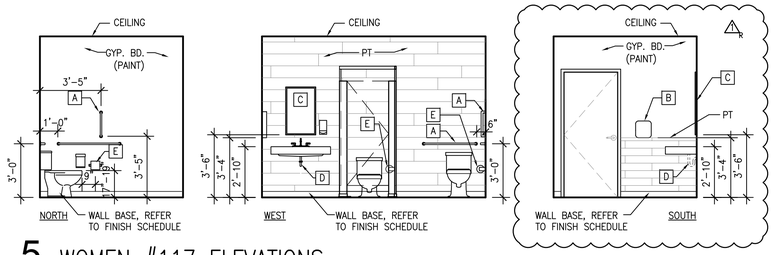

5 WOMEN #117 ELEVATIONS

A5.1 | A5.1 SCALE: 1/4" = 1'-0"

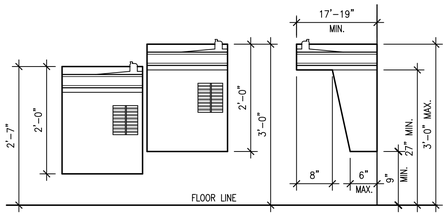

6 H.C. ELECTRIC WATER COOLER

A5.1 | A5.1 SCALE: 3/4"=1'-0"

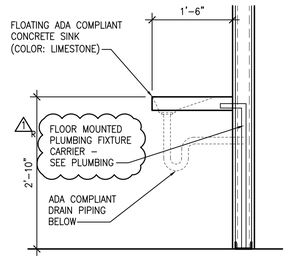

7 SECTION THRU VANITY (TYP.)

A5.1 | A5.1 SCALE: 3/4" = 1'-0"

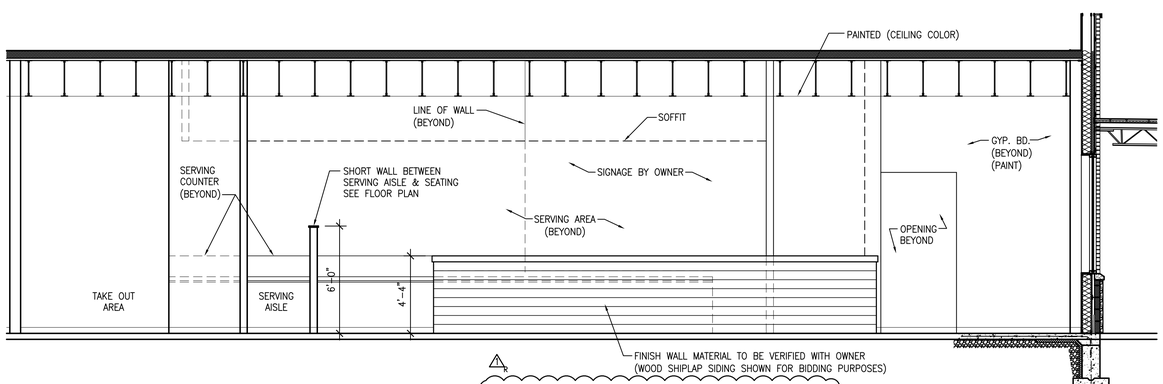

8 DINING ROOM ACCENT WALL

A5.1 | A5.1 SCALE: 1/4" = 1'-0"

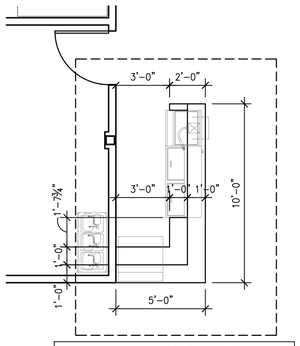

COORDINATE WITH THE FOOD SERVICE EQUIPMENT DRAWINGS FOR EQUIPMENT IN THE SERVER STATION.

9 SERVER STATION PLAN

A5.1 | A5.1 SCALE: 1/2" = 1'-0"

TOILET ACCESSORIES

NO.	ITEM
A	H.C. GRAB BARS
B	ELECTRIC HAND DRYERS – XLERATOR XL-SB BRUSHED STAINLESS OR EQUAL. VERIFY TYPE/FINISH WITH OWNER
C	20"X32" ADA H.C. MIRROR
D	INSULATE PER ADA
E	TOILET PAPER DISPENSING
F	SOAP DISPENSER

NOTES:

1. ALL TOILET ACCESSORIES TO BE PROVIDED AND INSTALLED BY CONTRACTOR UNLESS OTHERWISE NOTED.
2. CONTRACTOR SHALL COORDINATE WITH OWNER ON OWNER PROVIDED AND CONTRACTOR INSTALLED ITEMS IN ORDER TO LOCATE REQUIRED BLOCKING.
3. PROVIDE WOOD BLOCKING FOR ATTACHMENT OF ALL MISC. RESTROOM ACCESSORIES INCLUDING MIRRORS, PAPER HANGER, PAPER TOWEL DISPENSER, SOAP DISPENSER, ETC.
4. PROVIDE THE REQUIRED TRAP SEAL PRIMER OR ICC APPROVED EQUAL FOR ALL NEW FLOOR DRAINS SUBJECT TO TRAP SEAL LOSS BY EVAPORATION.
5. PROVIDE FLOOR MOUNTED PLUMBING FIXTURE CARRIERS FOR CONCRETE SINKS.

BAALMAN ARCHITECTS

#2 Daniel Drive
O'Fallon, MO 63366
ph: 314.640.6212

Michael J. Baalman
ARCHITECT
License#: A-2012004035
Certificate of Authority: 2014003655

STRUCTURAL
AEDIFICA CASE ENGINEERING
796 MERUS COURT
ST. LOUIS, MO 63026
CONTACT: STEVE SACCO, P.E.
PHONE: 636-349-1600

MECHANCIAL, PLUMBING, ELECTRICAL AND FIRE PROTECTION SYSTEMS
G&W ENGINEERING
138 WELDON PKWY
MARYLAND HEIGHTS, MO 63043
CONTACT: KEVIN GRIESEMER
PHONE: 314-469-3737

New Restaurant, Banquet Center & Corporate Offices at The Junction for:

Sugarfire Smoke House

600 West Main
Wentzville, Missouri 63385

DATE	ISSUE	R#
6-15-18	Bid & Permit Issue	
6-27-18	Addendum No 1	1

Michael J. Baalman
ARCHITECT

PROJECT MANAGER: MJB
DRAWN BY: JKL

PROJECT NUMBER
16-076
DATE
June 15, 2018

SHEET
A5.1
ENLARGED FLOOR PLANS & ELEVATIONS

COPYRIGHT © 2018 BAALMAN ARCHITECTS

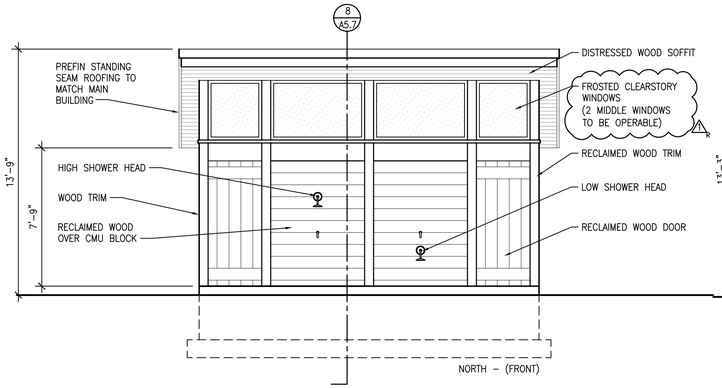

1 FRONT ELEVATION
A5.7 | A5.7 SCALE: 1/4" = 1'-0" BATH HOUSE

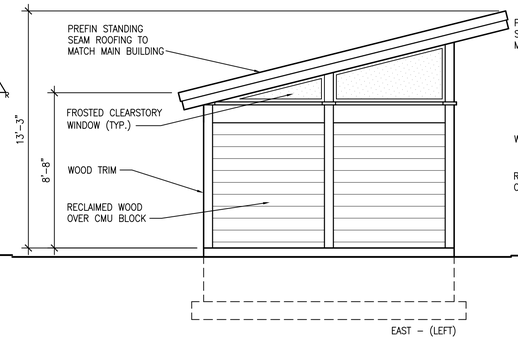

2 LEFT SIDE ELEVATION
A5.7 | A5.7 SCALE: 1/4" = 1'-0" BATH HOUSE

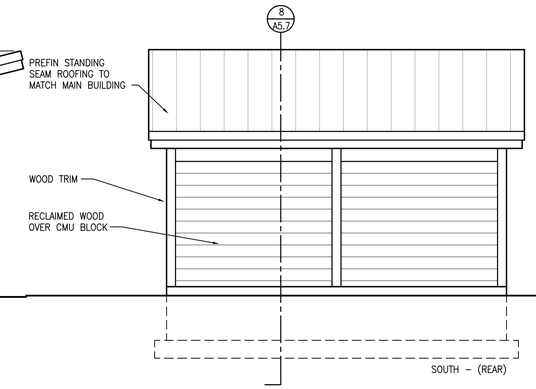

3 REAR ELEVATION
A5.7 | A5.7 SCALE: 1/4" = 1'-0" BATH HOUSE

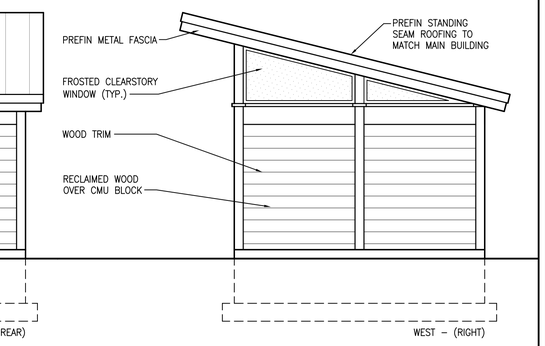

4 RIGHT SIDE ELEVATION
A5.7 | A5.7 SCALE: 1/4" = 1'-0" BATH HOUSE

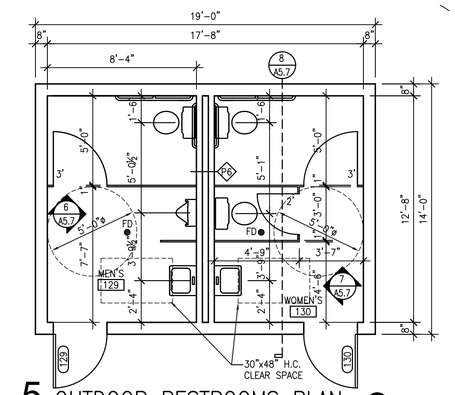

5 OUTDOOR RESTROOMS PLAN
A5.7 | A5.7 SCALE: 1/4" = 1'-0"

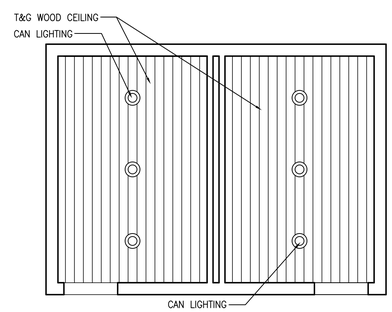

5 OUTDOOR RESTROOMS CEILING PLAN
A5.7 | A5.7 SCALE: 1/4" = 1'-0"

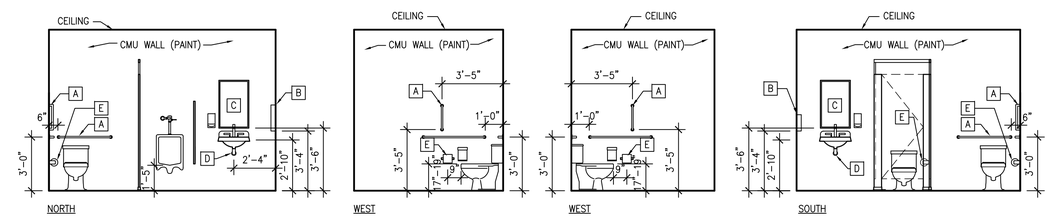

6 MEN'S #129 ELEVATIONS
A5.7 | A5.7 SCALE: 1/4" = 1'-0"

7 WOMEN'S #130 ELEVATIONS
A5.7 | A5.7 SCALE: 1/4" = 1'-0"

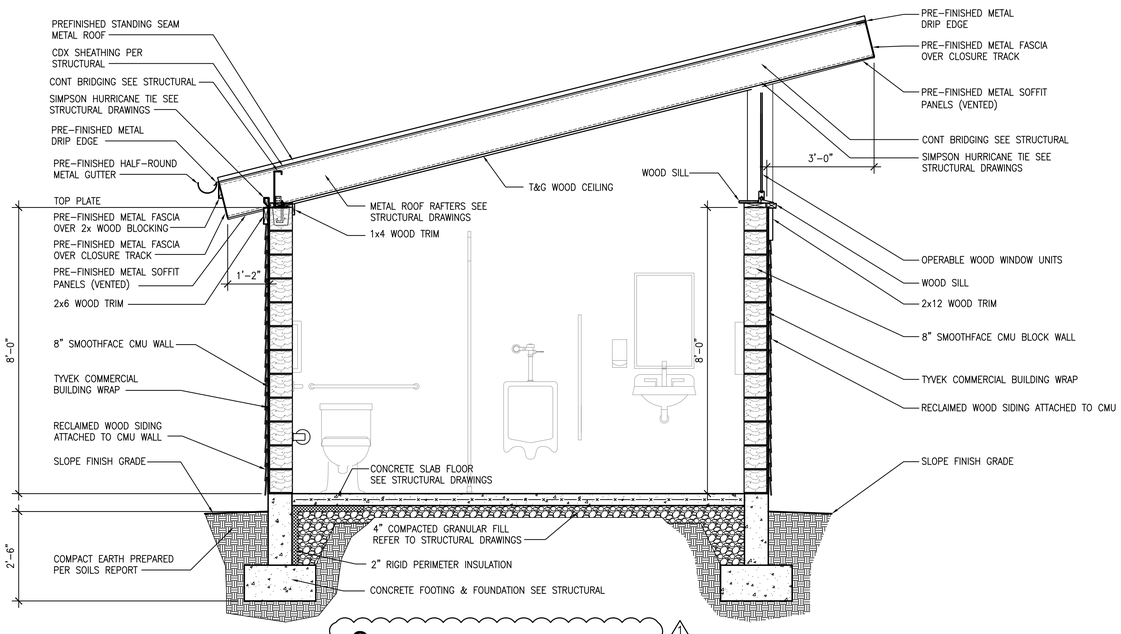

8 SECTION THRU BUILDING
A5.7 | A5.7 SCALE: 1/2" = 1'-0"

TOILET ACCESSORIES

NO.	ITEM
A	H.C. GRAB BARS
B	ELECTRIC HAND DRYERS – XLERATOR XL-SB BRUSHED STAINLESS OR EQUAL. VERIFY TYPE/FINISH WITH OWNER
C	20"X32" ADA H.C. MIRROR
D	INSULATE PER ADA
E	TOILET PAPER DISPENSING
F	SOAP DISPENSER

NOTES:
1. ALL TOILET ACCESSORIES TO BE PROVIDED AND INSTALLED BY CONTRACTOR UNLESS OTHERWISE NOTED.

2. CONTRACTOR SHALL COORDINATE WITH OWNER ON OWNER PROVIDED AND CONTRACTOR INSTALLED ITEMS IN ORDER TO LOCATE REQUIRED BLOCKING.

3. PROVIDE WOOD BLOCKING FOR ATTACHMENT OF ALL MISC. RESTROOM ACCESSORIES INCLUDING MIRRORS, PAPER HANGER, PAPER TOWEL DISPENSER, SOAP DISPENSER, ETC.

4. PROVIDE THE REQUIRED TRAP SEAL PRIMER OR ICC APPROVED EQUAL FOR ALL NEW FLOOR DRAINS SUBJECT TO TRAP SEAL LOSS BY EVAPORATION.

COPYRIGHT © 2018 BAALMAN ARCHITECTS

BAALMAN ARCHITECTS
#2 Daniel Drive
O'Fallon, MO 63366
ph: 314.640.6212

Michael J. Baalman
ARCHITECT
License#: A-2012004035
Certificate of Authority: 2014003655

STRUCTURAL
AEDIFICA CASE ENGINEERING
796 MERUS COURT
ST. LOUIS, MO 63026
CONTACT: STEVE SACCO, P.E.
PHONE: 636-349-1600

MECHANCIAL, PLUMBING, ELECTRICAL AND FIRE PROTECTION SYSTEMS
G&W ENGINEERING
138 WELDON PKWY
MARYLAND HEIGHTS, MO 63043
CONTACT: KEVIN GRIESEMER
PHONE: 314-469-3737

New Restaurant, Banquet Center & Corporate Offices at The Junction for:
Sugarfire Smoke House
600 West Main
Wentzville, Missouri 63385

DATE	ISSUE	R#
6-15-18	Bid & Permit Issue	
6-27-18	Addendum No. 1	1

Michael J. Baalman
ARCHITECT

PROJECT MANAGER: MJB
DRAWN BY: JKL

PROJECT NUMBER
16-076
DATE
June 15, 2018

SHEET
A5.7
OUTDOOR RESTROOMS, & DETAILS

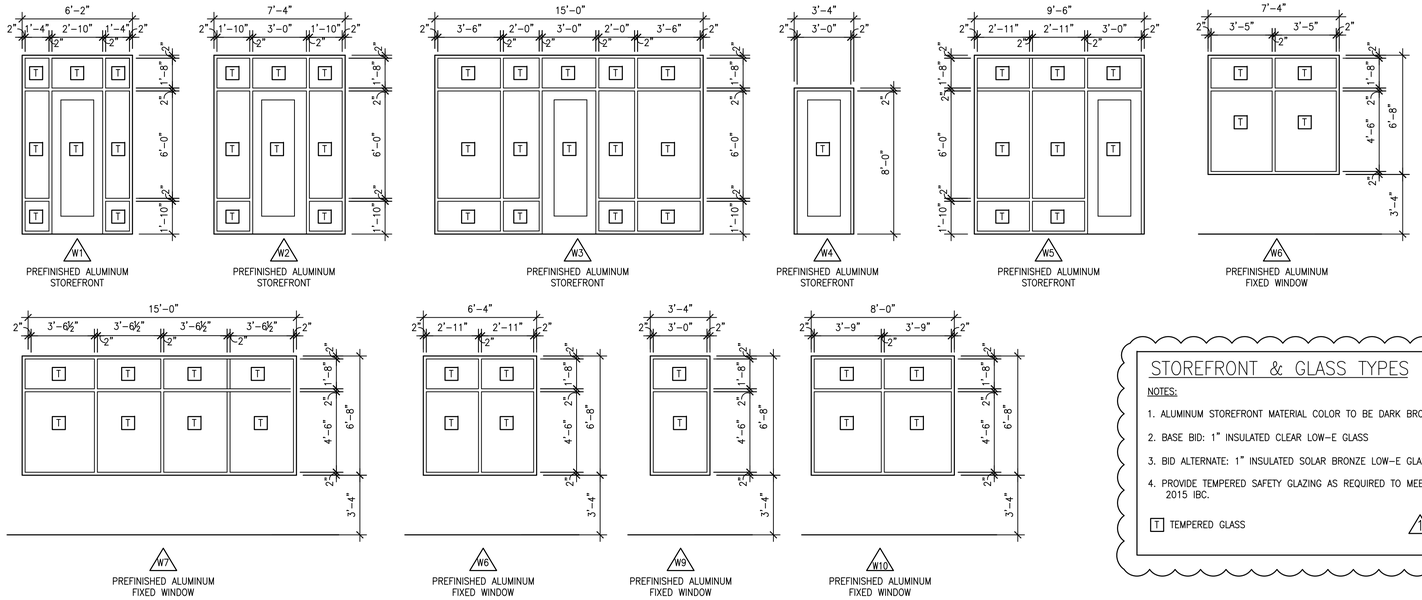

1 STOREFRONT & WINDOW TYPES

A6.1 | A6.1 SCALE: 1/4" = 1'-0"

STOREFRONT & GLASS TYPES

NOTES:

1. ALUMINUM STOREFRONT MATERIAL COLOR TO BE DARK BRONZE
2. BASE BID: 1" INSULATED CLEAR LOW-E GLASS
3. BID ALTERNATE: 1" INSULATED SOLAR BRONZE LOW-E GLASS
4. PROVIDE TEMPERED SAFETY GLAZING AS REQUIRED TO MEET 2015 IBC.

T TEMPERED GLASS

DOOR SCHEDULE

DOOR NO.	DOOR SIZE	DOOR TYPE	DOOR MAT.	FRAME MAT.	FRAME TYPE	FIRE RATING	HARDWARE GROUP	REMARKS
101	3'-0" x 8'-0" x 1 3/4"	D2	ALUM	ALUM	W1	–	1	ALUMINUM ENTRANCE
102	3'-0" x 8'-0" x 1 3/4"	D2	ALUM	ALUM	W1	–	1	ALUMINUM ENTRANCE
103	3'-0" x 8'-0" x 1 3/4"	D2	ALUM	ALUM	W4	–	2	ALUMINUM ENTRANCE
104	3'-0" x 8'-0" x 1 3/4"	D2	ALUM	ALUM	W2	–	1	ALUMINUM ENTRANCE
108	3'-0" x 7'-0" x 1 3/4"	D1	WOOD	H.M.	F1	–	8	
110	3'-0" x 7'-0" x 1 3/4"	D6	S.S.	H.M.	F1	–	12	DOUBLE ACTING
115	3'-6" x 7'-0" x 1 3/4"	D3	H.M.	H.M.	F2	–	3	WITH HD FRAME / GALVANIZED
116	3'-0" x 7'-0" x 1 3/4"	D5	WOOD	H.M.	F1	–	13	
117	3'-0" x 7'-0" x 1 3/4"	D5	WOOD	H.M.	F1	–	13	
118A	3'-0" x 8'-0" x 1 3/4"	D2	ALUM	ALUM	W5	–	1	ALUMINUM ENTRANCE
118B	3'-0" x 8'-0" x 1 3/4"	D2	ALUM	ALUM	W5	–	1	ALUMINUM ENTRANCE
118C	6-2" x 8'-0"	D4	GLASS	STEEL	–	–	14	O.H. DOOR
118D	6-2" x 8'-0"	D4	GLASS	STEEL	–	–	14	O.H. DOOR
118E	6-2" x 8'-0"	D4	GLASS	STEEL	–	–	14	O.H. DOOR
118F	6-2" x 8'-0"	D4	GLASS	STEEL	–	–	14	O.H. DOOR
118G	6-2" x 8'-0"	D4	GLASS	STEEL	–	–	14	O.H. DOOR
121A	3'-0" x 8'-0" x 1 3/4"	D2	ALUM	ALUM	W3	–	1	ALUMINUM ENTRANCE
121B	3'-0" x 8'-0" x 1 3/4"	D2	ALUM	ALUM	W3	–	1	ALUMINUM ENTRANCE
121C	3'-0" x 7'-0" x 1 3/4"	D3	H.M.	H.M.	F2	–	4	
123A	3'-0" x 7'-0" x 1 3/4"	D1	WOOD	H.M.	F1	–	7	
123B	3'-0" x 7'-0" x 1 3/4"	D1	WOOD	H.M.	F1	–	7	
124	3'-0" x 7'-0" x 1 3/4"	D1	WOOD	H.M.	F1	–	8	
125A	3'-0" x 7'-0" x 1 3/4"	D3	H.M.	H.M.	F2	–	5	
125B	3'-0" x 7'-0" x 1 3/4"	D1	WOOD	H.M.	F1	–	10	
126	3'-0" x 7'-0" x 1 3/4"	D1	WOOD	H.M.	F1	–	9	
127	3'-0" x 7'-0" x 1 3/4"	D1	WOOD	H.M.	F1	–	6	
128	3'-0" x 7'-0" x 1 3/4"	D1	WOOD	H.M.	F1	–	11	
129	3'-0" x 7'-0" x 1 3/4"	D1	WOOD	H.M.	F1	–	11	
130	3'-0" x 7'-0" x 1 3/4"	D1	WOOD	H.M.	F1	–	11	

HARDWARE

1. REFER TO HARDWARE SPECIFICATIONS UNDER SEPARATE COVER FOR ALL DOOR HARDWARE.
2. VERIFY ALL HARDWARE WITH OWNER.
3. VERIFY ALL KEYING WITH OWNER.
4. ALL LATCHING INTERIOR DOORS TO HAVE LEVER TYPE ADA APPROVED ACCEPTABLE HARDWARE UNLESS OTHERWISE NOTED.
5. ALL HANDICAPPED ACCESSIBLE ROOM DOORS ARE REQUIRED TO HAVE A MINIMUM OF 12" CLEARANCE ON PUSH SIDE AND 18" CLEARANCE ON PULL SIDE.
6. VERIFY ALL HARDWARE WITH OWNER AND HARDWARE SUPPLIER PRIOR TO INSTALLATION. ALL HARDWARE IS TO BE IN CONFORMANCE WITH IBC 2015 AND LOCAL FIRE DEPARTMENT.
7. ALL EGRESS DOORS SHALL BE READILY OPENABLE FROM THE EGRESS SIDE WITHOUT THE USE OF A KEY OR SPECIAL KNOWLEDGE OR EFFORT PER SECTION 1010.1.9 OF THE 2015 IBC.

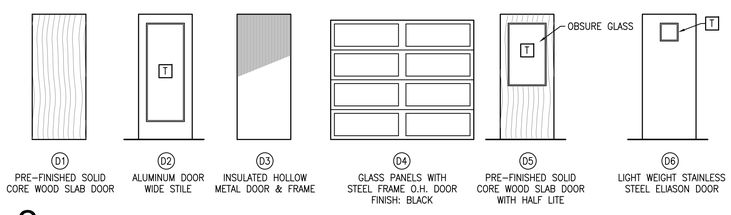

2 DOOR TYPES

A6.1 | A6.1 SCALE: 1/4" = 1'-0"

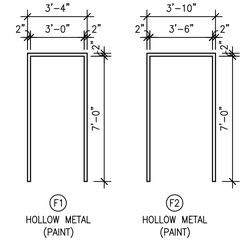

3 FRAME TYPES

A6.1 | A6.1 SCALE: 1/4" = 1'-0"

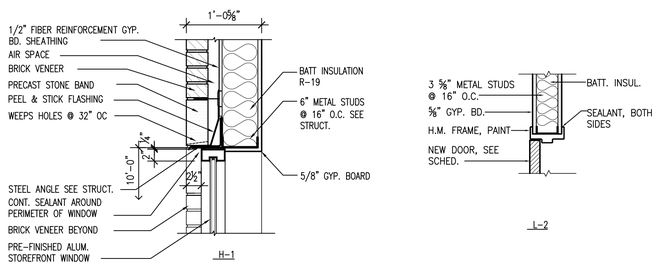

4 HEADER TYPES

A6.1 | A6.1 SCALE: 1" =1'-0"

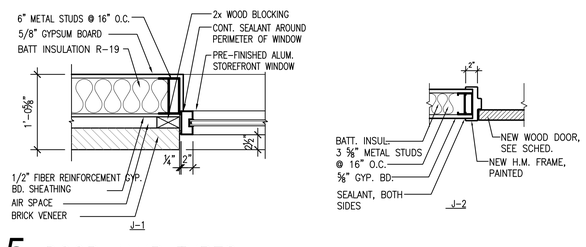

5 DOOR JAMB TYPES

A6.1 | A6.1 SCALE: 1"=1'-0"

COPYRIGHT © 2018 BAALMAN ARCHITECTS

BAALMAN ARCHITECTS
#2 Daniel Drive
O'Fallon, MO 63366
ph: 314.640.6212

Michael J. Baalman
ARCHITECT
License#: A-2012004035
Certificate of Authority: 2014003655

STRUCTURAL
AEDIFICA CASE ENGINEERING
796 MERUS COURT
ST. LOUIS, MO 63026
CONTACT: STEVE SACCO, P.E.
PHONE: 636-349-1600

MECHANCIAL, PLUMBING, ELECTRICAL AND FIRE PROTECTION SYSTEMS
G&W ENGINEERING
138 WELDON PKWY
MARYLAND HEIGHTS, MO 63043
CONTACT: KEVIN GRIESEMER
PHONE: 314-469-3737

New Restaurant, Banquet Center & Corporate Offices at The Junction for:
Sugarfire Smoke House
600 West Main
Wentzville, Missouri 63385

DATE	ISSUE	R#
6-15-18	Bid & Permit Issue	
6-27-18	Addendum No 1	1

Michael J. Baalman
ARCHITECT

PROJECT MANAGER: MJB
DRAWN BY: JKL

PROJECT NUMBER
16-076
DATE
June 15, 2018

SHEET
A6.1
DOORS & WINDOWS & SCHEDULES

MECHANICAL CRITERIA

1. BEFORE SUBMITTING A PROPOSAL, THE MECHANICAL CONTRACTOR SHALL VISIT THE SITE OF WORK AND BECOME FAMILIAR WITH ALL SITE CONDITIONS. MECHANICAL CONTRACTOR SHALL CAREFULLY EXAMINE ALL CIVIL, ARCHITECTURAL, STRUCTURAL, PLUMBING, AND ELECTRICAL CONSTRUCTION DOCUMENTS. SUBMISSION OF A BID WILL ACKNOWLEDGE THE MECHANICAL CONTRACTOR HAS VISITED THE SITE AND EXAMINED ALL CONSTRUCTION DOCUMENTS AND BID INSTRUCTIONS. THE MECHANICAL CONTRACTOR'S BID SHALL INCLUDE ALL MECHANICAL WORK IN THE CONSTRUCTION DOCUMENTS, INCLUDING MECHANICAL WORK RELATED TO EQUIPMENT PROVIDED BY OTHERS.

2. MECHANICAL CONTRACTOR SHALL PERFORM WORK IN A SAFE MANNER. COMPLY WITH APPLICABLE OSHA SAFETY GUIDELINES DURING THE COURSE OF COMPLETING THE WORK DESCRIBED ON THESE CONSTRUCTION DOCUMENTS.

3. MECHANICAL CONTRACTOR SHALL REQUEST CLARIFICATION ON ANY ITEM(S) OF THE CONTRACT DOCUMENTS THAT ARE NOT UNDERSTOOD OR WHERE CONFLICTS MAY EXIST. CLARIFICATIONS MUST BE PRESENTED AS A "REQUEST FOR INFORMATION" (RFI) IN WRITING PRIOR TO SUBMITTING A BID. RFI SHALL BE PRESENTED A MINIMUM OF FIVE (5) WORKING DAYS BEFORE THE BID DATE. OBTAIN THE RFI FORM AT HTTPS://WWW.GANDWENGINEERING.COM/DOCUMENTS. SUBMISSION OF A BID WILL ACKNOWLEDGE THE MECHANICAL CONTRACTOR UNDERSTANDS THE SCOPE OF WORK, MEANS AND METHODS OF INSTALLATION, EQUIPMENT AND MATERIALS TO BE USED. RFI THAT HAVE NOT BEEN CLARIFIED PRIOR TO BID, WILL BE PROVIDED BY THE MECHANICAL CONTRACTOR, AS DIRECTED BY THE ENGINEER OF RECORD, AND THE MOST STRINGENT MATERIALS, EQUIPMENT, AND SCOPE OF WORK SHALL APPLY. NO ADDITIONAL COMPENSATION WILL BE MADE FOR THE FAILURE OF THE CONTRACTOR TO OBTAIN CLARIFICATIONS PRIOR TO BID.

4. THE MECHANICAL CONTRACTOR'S BID SHALL BE BASED ON THE SCHEDULED EQUIPMENT, MATERIALS, AND MANUFACTURERS WHICH FORM THE "BASIS OF DESIGN". ALL OTHER EQUIPMENT, MATERIALS, AND MANUFACTURERS, ARE CONSIDERED SUBSTITUTIONS. CONTRACTOR PROPOSED SUBSTITUTIONS MUST BE SUBMITTED TO THE ENGINEER OF RECORD FOR REVIEW AND WITH A COMPLETED SUBSTITUTION REQUEST FORM. OBTAIN THIS FORM AT HTTPS://WWW.GANDWENGINEERING.COM/DOCUMENTS. APPROVALS OF SUBSTITUTIONS ARE CONTINGENT UPON ENGINEER'S REVIEW. THE MECHANICAL CONTRACTOR SHALL MAKE NO PRIOR ASSUMPTIONS ON SUBSTITUTIONS NOT APPROVED BY THE ENGINEER. IF THE ENGINEER APPROVES A SUBSTITUTION REQUEST, THE MECHANICAL CONTRACTOR WILL BE HELD RESPONSIBLE FOR ENGINEERING REVISIONS, PHYSICAL SIZE, CAPACITIES, COORDINATION, SUPPLEMENTAL DRAWINGS AND REFORMING OTHER TRADE CONTRACTORS RELATED TO THE INSTALLATION, AS TO ANY SPECIFIED ITEM CHANGES. THE MECHANICAL CONTRACTOR SHALL BEAR AS PART OF HIS CONTRACT, ANY ADDITIONAL COSTS INCURRED IN HIS WORK OR BY THE OTHER CONTRACTORS AS A RESULT OF INSTALLATION FOR OTHER THAN "BASIS OF DESIGN" MATERIALS AND EQUIPMENT.

5. SHOP DRAWINGS SHALL BE SUBMITTED ELECTRONICALLY AS PDF FILES. SHOP DRAWINGS SHALL INCLUDE TRANSMITTAL PAGE(S) INDICATING THE NAME OF THE PROJECT, AND THE NAME, ADDRESS, AND PHONE NUMBER OF THE GENERAL AND MECHANICAL CONTRACTORS. GENERAL CONTRACTOR AND MECHANICAL CONTRACTOR SHALL REVIEW SHOP DRAWING SUBMITTALS FOR COMPLIANCE, CONTENT AND COMPLETENESS AND PROVIDE A STAMP WITH THE DATE OF REVIEW AND SIGNATURE OF THE REVIEWER. TRANSMITTAL PAGE SHALL HAVE INDEX WITH SPECIFICATION SECTION AND DESCRIPTION OF SUBMITTED ITEMS. NO EXCEPTIONS WILL BE TAKEN. SHOP DRAWINGS NOT SUBMITTED IN THIS FORMAT WILL BE REJECTED AND WILL NOT CAUSE REASON FOR PROJECT DELAYS. EQUIPMENT SHALL NOT BE ORDERED UNTIL ENGINEER OF RECORD HAS PROCESSED APPLICABLE SHOP DRAWINGS. A PERIOD OF TEN BUSINESS DAYS WILL BE ALLOWED FOR SUBMITTAL PROCESSING BY THE ENGINEER. REFER TO ARCHITECT'S GENERAL REQUIREMENTS FOR ADDITIONAL REQUIREMENTS. MECHANICAL SUBMITTALS REQUIRED SHALL MINIMALLY INCLUDE THE FOLLOWING:
   a. ALL NEW SCHEDULED EQUIPMENT AND ACCESSORIES.
   b. GRILLES, REGISTERS, AND DIFFUSERS.
   c. DUCT INSULATION.
   d. PIPE & PIPE INSULATION.
   e. VALVES AND PIPE SPECIALTIES.
   f. BUILDING MANAGEMENT/ TEMPERATURE CONTROL SYSTEM
   g. HVAC TESTING, ADJUSTING, & BALANCING REPORT.

6. THE MECHANICAL CONTRACTOR SHALL HAVE ACCESS TO ELECTRONIC FILES OWNED AND/OR CREATED BY G&W ENGINEERING CORPORATION IN PREPARATION OF CONTRACTOR'S SUBMITTALS OR OTHER APPROVED USE. THE USE OF THESE FILES REQUIRES A SIGNED "RELEASE" FORM AGREEING TO ALL TERMS AND CONDITIONS OUTLINED ON THE FORM AND ASSOCIATED DISCLAIMER. THE SIGNED FORM SHALL BE RECEIVED BY G&W ENGINEERING CORPORATION PRIOR TO SHARING ANY ELECTRONIC MEDIA AND/OR DATA. IN ACCEPTING, OPENING, COPYING, AND/OR USING ANY DRAWINGS, REPORTS, OR DATA IN ANY FORM OF ELECTRONIC MEDIA GENERATED AND TRANSMITTED OR FURNISHED BY G&W ENGINEERING CORPORATION, THE RECIPIENT AGREES THAT ALL SUCH ELECTRONIC FILES ARE INSTRUMENTS OF SERVICE OF G&W ENGINEERING CORPORATION, WHO SHALL BE DEEMED THE AUTHOR, AND SHALL RETAIN ALL COMMON LAW, STATUTORY LAW, AND OTHER RIGHTS, INCLUDING COPYRIGHTS. THE RECIPIENT ALSO AGREES NOT TO TRANSFER THESE ELECTRONIC FILES TO OTHERS WITHOUT THE PRIOR WRITTEN CONSENT OF G&W ENGINEERING CORPORATION. G&W ENGINEERING CORPORATION MAKES NO WARRANTIES, EITHER EXPRESSED OR IMPLIED, OF THE ACCURACY OR FITNESS FOR USE FOR ANY PARTICULAR PURPOSE. THE RECIPIENT AGREES THAT ANY USE OF THESE ELECTRONIC FILES IS AT THEIR OWN RISK. IN NO EVENT SHALL G&W ENGINEERING CORPORATION BE LIABLE FOR DIRECT, INDIRECT, OR CONSEQUENTIAL DAMAGES AS A RESULT OF THE RECIPIENT'S USE OR REUSE OF THE ELECTRONIC FILES. G&W ENGINEERING CORPORATION SHALL BE HELD HARMLESS AGAINST ALL DAMAGES, LIABILITIES, OR COSTS, INCLUDING REASONABLE ATTORNEYS' FEES AND DEFENSE COSTS, ARISING OUT OF OR RESULTING FROM USE OF THESE ELECTRONIC FILES.

7. SUBMIT AND PAY FOR ALL REQUIRED WORK PERMITS. PROVIDE ALL REQUIRED INSPECTIONS AND RE-INSPECTIONS. PROVIDE A SIGNED CERTIFICATE OF INSPECTION AT THE PROJECT COMPLETION.

8. ALL EQUIPMENT AND MATERIALS SHALL BE SPECIFICALLY PROVIDED PER WRITTEN INSTALLATION INSTRUCTIONS AS PUBLISHED BY THE MANUFACTURER OF THE EQUIPMENT OR MATERIAL PROVIDER. MEANS AND METHODS OF INSTALLATION ARE TO BE UNDERSTOOD BY THE MECHANICAL CONTRACTOR. THE MECHANICAL CONTRACTOR SHALL OBTAIN THE INSTALLATION INSTRUCTIONS AND REQUIREMENTS PRIOR TO BID. ALL RFI AND CLARIFICATIONS OF SCOPE DURING CONSTRUCTION WHERE THE CONTRACTOR HAS NOT PREVIOUSLY OBTAINED THIS INFORMATION FOR BIDDING PURPOSES WILL NOT BE CAUSE FOR ADDITIONAL COSTS OR CONSTRUCTION DELAY.

9. THE MECHANICAL SCOPE OF WORK SHALL BE PROVIDED TO COMPLY WITH THE ADOPTED EDITION OF THE INTERNATIONAL MECHANICAL CODE, LOCAL ORDINANCES, STATE LAW, AND FEDERAL LAW. REFER TO THE ARCHITECTURAL CODE BLOCK OR THE MUNICIPALITY WEBSITE FOR THE APPLICABLE CODES AND ADOPTED ORDINANCES PRIOR TO BID. SUBMISSION OF A BID ACKNOWLEDGES THE MECHANICAL CONTRACTOR HAS PERFORMED THIS REQUIREMENT AND THE BID INCLUDES LABOR AND MATERIAL TO PROVIDE CODE COMPLIANCE. SEISMIC RESTRAINTS AND ANCHORAGE SHALL BE PROVIDED TO COMPLY WITH THE 2015 INTERNATIONAL BUILDING CODE. PROVIDE ENGINEERED SEISMIC RESTRAINT DETAILS SIGNED AND SEALED BY A MISSOURI LICENSED ENGINEER. SUBMIT FOR REVIEW BY ENGINEER OF RECORD.

10. MECHANICAL CONTRACTOR SHALL PROVIDE FIELD COORDINATION WITH OTHER TRADES; SYSTEMS AS SHOWN ARE DIAGRAMMATIC AND GIVE THE GENERAL ARRANGEMENT AND LOCATIONS ONLY. MECHANICAL CONTRACTOR SHALL COMPLETELY REVIEW ARCHITECTURAL DRAWINGS, STRUCTURAL DRAWINGS, CEILING ELEVATIONS, AND SYSTEM DRAWINGS OF OTHER TRADES FOR DETAILS OF CONSTRUCTION. ROUGH-IN OF MECHANICAL DEVICES, AIR TERMINALS, EQUIPMENT, PIPING, ATTACHMENTS, AND HANGERS SHALL BE BASED ON THIS REVIEW. EXACT LOCATIONS AND FINAL LAYOUT SHALL BE DETERMINED IN THE FIELD, PROVIDE ALL NECESSARY EQUIPMENT, DUCT TRANSITIONS, PIPE TRANSITIONS, FITTINGS, HANGERS, SUPPORTS, AND OFFSETS REQUIRED FOR A COMPLETE INSTALLATION IN ALL RESPECTS. THE MECHANICAL CONTRACTOR MEANS AND METHODS OF INSTALLATION SHALL PROVIDE FOR OPERATING EFFICIENCY, NEATNESS OF APPEARANCE, AND EASE OF MAINTENANCE. THE MECHANICAL CONTRACTOR WILL PREPARE DIMENSIONED FIELD ERECTION DRAWINGS WHERE REQUIRED FOR USE BY THE INSTALLERS, TO INSURE PROPER INSTALLATION AND COORDINATION. THE MECHANICAL CONTRACTOR SHALL TAKE THEIR OWN MEASUREMENTS AT THE BUILDING, AND BE RESPONSIBLE FOR THE CORRECT LAYOUT, INTERPRETATION, AND USE OF ALL SIZES AND DIMENSIONS. THE CONTRACTOR SHALL KEEP "AS-BUILT" INFORMATION DURING CONSTRUCTION AND FURNISH TO THE OWNER OR TENANT A RECORD SET OF LEGIBLE BLACK LINE PRINTS AND AN ELECTRONIC COPY OF THESE DOCUMENTS AT THE PROJECT COMPLETION.

11. REVIEW ARCHITECTURAL DRAWINGS FOR ALL FIRE RATINGS AND FIRE RATED ASSEMBLIES PRIOR TO BIDDING THE PROJECT. PROVIDE FIRE STOP AT EACH RATED WALL, FLOOR, CEILING-ROOF ASSEMBLY PENETRATION. FIRE STOP SYSTEMS SHALL BE MANUFACTURED BY "3M". PROVIDE IN STRICT COMPLIANCE WITH THE MANUFACTURER'S APPLICATION DETAILS AND INSTRUCTIONS. PROVIDE TAGGED CERTIFICATIONS AT EACH PENETRATION. PROVIDE SHOP DRAWINGS FOR REVIEW WITH THE U.L. LISTING AND TEST CRITERIA. PROVIDE FIRE STOPPING WHERE REQUIRED BY THE AUTHORITY HAVING JURISDICTION. EQUAL SYSTEMS AS MANUFACTURED BY "SPEC SEAL" OR "HILTI" WILL BE ACCEPTABLE.

12. PROVIDE DUCT, PIPING, AND HANGER PENETRATIONS OF NON-RATED ASSEMBLIES WITH DRAFT STOPPING, OR SMOKE BARRIER SEALANT SYSTEMS. THROUGH PENETRATION SEALANT SYSTEMS SHALL BE MANUFACTURED BY "3M". APPLY IN STRICT COMPLIANCE WITH THE MANUFACTURER'S APPLICATION DETAILS AND INSTRUCTIONS. PROVIDE DRAFT STOPPING OR SMOKE BARRIER SEALANTS TO MEET APPROVAL OF THE AUTHORITY HAVING JURISDICTION. EQUAL SYSTEMS AS MANUFACTURED BY "SPEC SEAL" OR "HILTI" WILL BE ACCEPTABLE.

13. THE MECHANICAL CONTRACTOR SHALL GUARANTEE ALL LABOR, EQUIPMENT AND MATERIAL INSTALLED UNDER THIS CONTRACT TO BE FREE FROM DEFECTS FOR A PERIOD OF ONE YEAR FROM DATE OF FINAL ACCEPTANCE AND SHALL REPAIR OR REPLACE WITHOUT COST TO THE OWNER ANY EQUIPMENT WHICH IS DEFECTIVE OR IMPROPERLY INSTALLED. IN ADDITION, THIS CONTRACTOR SHALL ASSUME FULL RESPONSIBILITY FOR ANY DAMAGE TO THE BUILDING AND ITS CONTENTS OR OTHER EQUIPMENT CAUSED BY DEFECTS OR IMPROPER INSTALLATION OF EQUIPMENT OR MATERIALS INSTALLED UNDER THIS SECTION OF THE WORK.

14. MECHANICAL CONTRACTOR SHALL CUT AND PATCH ROOF, FLOORS, WALLS, AND CEILINGS WHERE REQUIRED TO INSTALL NEW MECHANICAL EQUIPMENT, DUCT, AND/OR PIPING SYSTEMS. SURFACES SHALL BE PATCHED AND LEFT READY FOR FINAL SCHEDULED FINISH. ROOFING REPAIRS SHALL BE PERFORMED BY A QUALIFIED ROOFING CONTRACTOR THAT MAINTAINS THE ROOF WARRANTY AT THE MECHANICAL CONTRACTOR'S EXPENSE. ALL ROOFING WORK SHALL BE INCLUDED IN THE MECHANICAL CONTRACTOR'S BID

15. FABRICATE AND INSTALL GALVANIZED SHEET METAL DUCTWORK FOR VELOCITIES LESS THAN 2000 FEET PER MINUTE AND STATIC PRESSURES LESS THAN 2" WATER GAUGE IN ACCORDANCE WITH THE LATEST EDITION OF THE "HVAC DUCT CONSTRUCTION STANDARDS - METAL AND FLEXIBLE" AS PUBLISHED BY THE SMACNA. PROVIDE ELBOWS, BRANCHES AND TEES IN SUPPLY AND RETURN DUCTS WITH TURNING VANES PER SMACNA STANDARDS. EXPOSED RECTANGULAR DUCT SHALL BE GALVANIZED SHEET METAL WITH MILL-PHOSPHATIZED FINISH SUITABLE FOR PAINTING. EXPOSED SPIRAL DUCT SHALL BE CODE GAUGE GALVANIZED SPIRAL SHEET METAL WITH MILL-PHOSPHATIZED FINISH SUITABLE FOR PAINTING. INSULATED FLEXIBLE DUCT SHALL BE "THERMAFLEX" TYPE M-KE, MAXIMUM 8'-0" LONG. DUCT SIZES INDICATED ARE SHEET METAL DIMENSIONS AND, IF DUCT LINER IS INDICATED, INCLUDE LINER. UNLESS NOTED OTHERWISE, DUCTWORK WITHOUT AN INSULATION TAG IS NOT LINED OR EXTERNALLY INSULATED.

16. THE MECHANICAL CONTRACTOR SHALL PROTECT ALL OPEN DUCT, PIPING, AND MECHANICAL EQUIPMENT, NEW AND EXISTING FROM CONSTRUCTION DUST AND DIRT. FOR MECHANICAL SYSTEMS OPERATED DURING CONSTRUCTION, NEW AND EXISTING, PROTECT EACH RETURN AIR DUCT OPENING WITH MERV 8 FILTERS AND INSTALL MERV 8 FILTER(S) IN EQUIPMENT FILTER RACK. PRIOR TO TESTING AND BALANCING, REMOVE FILTERS AND INSTALL NEW MERV 8 FILTERS. AT COMPLETION OF CONSTRUCTION, REMOVE CONSTRUCTION FILTERS AND REPLACE EQUIPMENT FILTERS WITH NEW FILTERS.

17. ALL JOINTS AND SEAMS OF NEW DUCT AND DUCT BEING RE-USED SHALL BE CLEANED AND SEALED. SEAL NEW DUCTS TO THE FOLLOWING SEAL CLASSES ACCORDING TO SMACNA "HVAC DUCT CONSTRUCTION STANDARDS - METAL AND FLEXIBLE": SEAL DUCTS WITH "FOSTER" 32-14 SEALANT PER MANUFACTURES INSTALLATION INSTRUCTIONS FOR ALL JOINTS IN LOW AND MEDIUM VELOCITY DUCT.
   OUTDOOR, SUPPLY-AIR DUCTS: SEAL CLASS A.
   OUTDOOR, EXHAUST DUCTS: SEAL CLASS C.
   OUTDOOR, RETURN-AIR DUCTS: SEAL CLASS C.
   UNCONDITIONED SPACE, SUPPLY-AIR DUCTS IN PRESSURE CLASS 2-INCH W.G. AND LOWER: SEAL CLASS B.
   UNCONDITIONED SPACE, EXHAUST DUCTS: SEAL CLASS C.
   UNCONDITIONED SPACE, RETURN-AIR DUCTS: SEAL CLASS B.
   CONDITIONED SPACE, SUPPLY-AIR DUCTS IN PRESSURE CLASS 2-INCH W.G. AND LOWER; SEAL CLASS C.
   CONDITIONED SPACE, EXHAUST DUCTS: SEAL CLASS B.
   CONDITIONED SPACE, RETURN-AIR DUCTS: SEAL CLASS C.

18. TEST AND ADJUST ALL AIR HANDLING EQUIPMENT, TERMINALS, AND AIR DEVICES TO PROVIDE THE REQUIRED AIR VOLUME AGAINST THE AVAILABLE SYSTEM STATIC PRESSURE. TEST AND SET ALL DAMPERS, SUPPLY, RETURN, OUTDOOR AIR AND EXHAUST DEVICES TO THE CFM SHOWN ON THE DRAWINGS. PROVIDE ALL REQUIRED SHEAVE AND BELT MODIFICATIONS REQUIRED TO OBTAIN CFM QUANTITIES SHOWN ON THE DRAWINGS. TESTING AND BALANCING SHALL BE IN ACCORDANCE WITH PROCEDURES OUTLINED IN TESTING AND BALANCING MANUAL AS PUBLISHED BY SMACNA. PROVIDE A TEST AND BALANCE REPORT PERFORMED AND PREPARED BY AN INDEPENDENT TESTING AND BALANCING CONTRACTOR CERTIFIED AABC OR NEBB. PROVIDE AN ELECTRONIC COPY OF THE TESTING AND BALANCING REPORT, INCLUDING A MARKED UP PLAN, FOR REVIEW BY THE ENGINEER.

19. MECHANICAL CONTRACTOR SHALL PROVIDE MATERIAL, FITTINGS, DUCTS, AND LABOR TO LOCATE ALL AIR INTAKES A MINIMUM OF 10'-0" FROM ANY EXHAUST DEVICE OR PLUMBING VENT. COORDINATE WITH OTHER TRADE CONTRACTORS ON THE PROJECT AND ANY EXISTING CONDITIONS PRIOR TO THE START OF CONSTRUCTION.

20. REFRIGERANT LINES SHALL BE HARD DRAWN COPPER TUBE; TYPE "L-ACR", WITH WROUGHT COPPER FITTINGS. ALL JOINTS SHALL BE BRAZED WITH SIL-FOS 15 OR EQUAL. PROVIDE A LIQUID LINE SIGHT GLASS AND DRYER-STRAINER AS MANUFACTURED BY SPORLAN OR EQUAL. INSULATE REFRIGERANT SUCTION LINES WITH 3/4" WALL THICKNESS INSULATION EQUAL TO "AP ARMAFLEX SS". COAT INSULATION ON BUILDING EXTERIOR WITH 2 COATS OF ARMAFLEX TYPE WB FINISH, UV, OZONE, & MOISTURE RESISTANT COMPOUND.

21. INSTALL PIPE SLEEVES FOR PIPES PENETRATING FLOORS, PARTITIONS, ROOFS, AND WALLS, EXCEPT CORE DRILLED CONCRETE. INSTALL SLEEVES IN CONCRETE FLOORS, CONCRETE ROOF SLABS, AND CONCRETE WALLS AS NEW SLABS AND WALLS ARE CONSTRUCTED.

22. CONDENSATE PIPING SHALL BE TYPE M HARD DRAWN COPPER. COPPER JOINTS SHALL BE MADE WITH 50-50 SOLDER. PIPING SHALL BE PITCHED IN THE DIRECTION OF FLOW WITH A PITCH OF 1" IN 8'. ALL CONDENSATE PIPING SHALL BE INSULATED WITH 1/2" WALL THICKNESS "AP ARMAFLEX SS" INSULATION. PROVIDE A LITTLE GIANT CONDENSATE PUMP, DISCHARGE DRAIN LINE TO AN APPROVED RECEPTOR, AND BRANCH CIRCUIT ELECTRICAL CONNECTION WHERE GRAVITY DRAIN CAN NOT BE INSTALLED.

23. NATURAL GAS PIPING SHALL BE SCHEDULE 40 BLACK STEEL, ASTM A120 WITH 150 LB. WELDED FITTINGS IN SEISMICALLY ACTIVE AREAS PER THE 2015 IBC. TYPE L COPPER MAY BE USED WITH BRAZED FITTINGS. ALL COPPER OR STEEL FITTINGS SHALL BE BRAZED OR WELDED IN RETURN AIR PLENUMS AND INACCESSIBLE LOCATIONS. NATURAL GAS PIPING SHALL BE SCHEDULE 40 BLACK STEEL, ASTM A120 WITH APPROVED FITTINGS IN NON-SEISMIC AREAS. ALL STEEL PIPING EXPOSED TO THE ELEMENTS SHALL BE PAINTED WITH RUST INHIBITIVE PAINT BY THE MECHANICAL CONTRACTOR. PROVIDE GAS COCK, UNION, AND DIRT LEG AT EACH EQUIPMENT CONNECTION. PROVIDE GAS PRESSURE REGULATORS, AS REQUIRED, TO REDUCE GAS PRESSURE FROM 2 PSI TO 7-12 INCHES WATER COLUMN. PROVIDE RELIEF VENT PIPING FROM ALL PRV TO THE EXTERIOR ATMOSPHERE BASED ON THE EQUIPMENT SUPPLIERS INSTALLATION INSTRUCTIONS. GAS PIPING SHALL BE SEISMICALLY ANCHORED AND SWAY BRACED TO MEET APPROVAL OF THE AHJ. PROVIDE A U.L. LISTED SEISMIC SHUT-OFF VALVE AS NOTED. SUBMIT SHOP DRAWING DETAILS FOR APPROVAL AND FIELD CONFIRMATION BY THE AHJ. THE MECHANICAL CONTRACTOR SHALL RETURN ALL EXISTING GAS-FIRED EQUIPMENT TO FULL OPERATION AFTER MAKING CONNECTIONS TO EXISTING GAS PIPE SERVICES.

24. PROVIDE FIRE DAMPERS IN FIRE RATED PARTITIONS. ALL DAMPERS SHALL BE INSTALLED WITH TWO (2) 8"X8" ACCESS PANELS AS A MINIMUM. FIRE DAMPERS SHALL BE PROVIDED IN STRICT COMPLIANCE WITH THE MANUFACTURER'S WRITTEN INSTRUCTIONS. THESE INSTRUCTIONS SHALL BE KEPT ON THE PROJECT SITE AND READILY AVAILABLE FOR THE AHJ INSPECTOR.

25. FURNISH AND INSTALL EXHAUST FANS AS SCHEDULED. ROOF MOUNTED FANS SHALL BE UL LISTED, AMCA CERTIFIED, DOWNBLAST CENTRIFUGAL, BELT DRIVE, WITH HEAVY GAUGE CORROSION RESISTANT SPUN ALUMINUM HOUSING, FAN, VIBRATION ISOLATED MOTOR AND DRIVE, BIRDSCREEN, GRAVITY BACK DRAFT DAMPER, FACTORY MOUNTED ELECTRICAL DISCONNECT, WITH PRE-FABRICATED GALVANIZED INSULATED CURB AND WIDE FLASHING FLANGE.

26. PROVIDE EXHAUST FANS AS SCHEDULED AND SPECIFIED. CEILING MOUNTED FANS SHALL BE UL LISTED, COMPLETE WITH 22 GAUGE GALVANIZED STEEL INLET BOX, INJECTION MOLDED RESIN FAN HOUSING, GRAVITY BACK DRAFT DAMPER, FACTORY ELECTRICAL DISCONNECT, DIRECT DRIVE, O.D.P. PERMANENTLY LUBRICATED MOTOR WITH VIBRATION ISOLATION, WHITE PLASTIC(ALUMINUM) GRILLE.

27. ELECTRICAL CONTRACTOR SHALL PROVIDE ELECTRIC HEATING EQUIPMENT AS SCHEDULED. HEATERS SHALL BE U.L. LISTED, COMPLETE WITH ELECTRICAL DISCONNECT, AUTOMATIC FAN, INTEGRAL TAMPER-PROOF THERMOSTATIC CONTROL, MOUNTING HARDWARE, SEMI-RECESSED MOUNTING FRAME AND ARCHITECTURAL FINISH COVER.

28. PROVIDE U.L. APPROVED TYPE "B" FLUES; METALBEST RV AND QC OR EQUAL. PROVIDE ROOF SUPPORT, TALL CONE ROOF FLASHING, STORM COLLAR AND FLUE CAP. EXTEND 3'-0" FROM TOP OF ROOF TO BOTTOM OF ROOF CAP OR A RIDGE LINE ELEVATION. INSTALL PER MANUFACTURES PUBLISHED INSTALLATION INSTRUCTIONS.

29. MECHANICAL CONTRACTOR SHALL PROVIDE ALL TEMPERATURE CONTROL WIRING, INCLUSIVE OF ALL VOLTAGES, NO EXCEPTIONS OR EXCLUSIONS. ALL COMPONENTS SHALL BE NEW UNLESS NOTED OTHERWISE. ALL THERMOSTATS SHALL BE NEW, EQUAL TO HONEYWELL T7351F UNLESS NOTED OTHERWISE. TYPICAL SPACE THERMOSTAT MOUNTING HEIGHT SHALL BE 48" A.F.F. COORDINATE ACTUAL THERMOSTAT MOUNTING WITH FINAL ARCHITECTURAL FLOOR AND FURNITURE PLANS. DO NOT MOUNT THERMOSTATS IN DIRECT SUNLIGHT, NEAR HEAT SOURCES, OR ON EXTERIOR WALLS. IF THERMOSTAT MUST BE MOUNTED ON AN EXTERIOR WALL, PROVIDE INSULATED MOUNTING BASE. ALL SYSTEMS SHALL BE COMPLETE INCLUDING, BUT NOT LIMITED TO: EXPERTISE, DESIGN, EQUIPMENT, CABINETS, BOXES, RELAYS, SWITCHES, CONTACTORS, TRANSFORMERS, WIRING, RACEWAYS, AND ELECTRICAL ACCESSORIES. WIRING EXPOSED IN RETURN AIR PLENUM SHALL BE PLENUM RATED CABLE. PROVIDE SHOP DRAWINGS FOR REVIEW AND PROCESSING. THE SHOP DRAWINGS SHALL CONTAIN A FLOOR PLAN WITH THERMOSTAT LOCATIONS, CONTROL SEQUENCE STATEMENT, AND WIRING DIAGRAM WITH ALL PARTS INDICATED OR A BILL OF MATERIAL.

30. CEILING MOUNTED EXHAUST FANS SHALL BE INTERLOCKED WITH THE LOCAL LIGHTING CIRCUIT.

31. ROOF MOUNTED EXHAUST FANS SHALL BE CONTROLLED THROUGH A TIME CLOCK LOCATED ABOVE THE ELECTRICAL PANEL SERVING THE POWER TO THE FAN.

32. THE KITCHEN EQUIPMENT DRAWINGS, HOOD EQUIPMENT DRAWINGS, AND MANUFACTURERS ENGINEERING TECHNICAL SHEETS ARE MADE PART OF THIS CONTRACT. ALL MECHANICAL REQUIREMENTS ON THE KITCHEN EQUIPMENT AND EXHAUST HOOD SYSTEM DRAWINGS SHALL BE PROVIDED BY THE MECHANICAL CONTRACTOR AS IT RELATES TO DIVISION 15. IT IS THE RESPONSIBILITY OF THE MECHANICAL CONTRACTOR TO OBTAIN COPIES OF THESE DOCUMENTS AND COMPLETELY FAMILIARIZE HIMSELF WITH THESE DOCUMENTS PRIOR TO BIDDING THIS PROJECT. SUBMISSION OF A BID ACKNOWLEDGES THE MECHANICAL WORK CONTRACTOR HAS REVIEWED ALL KITCHEN EQUIPMENT AND HOOD INFORMATION, AND THE BID INCLUDES ALL EQUIPMENT, EXPERTISE, RIGGING, TESTING, AND LABOR NECESSARY TO COMPLETE INSTALLATION OF THE KITCHEN EQUIPMENT AND HOOD SYSTEMS. WHEN MECHANICAL DRAWINGS AND KITCHEN EQUIPMENT DRAWINGS CONFLICT, THE MOST STRINGENT REQUIREMENTS APPLY AND THIS CONTRACTOR SHALL REQUEST CLARIFICATION PRIOR TO BID OR STARTING WORK. EXPOSED UTILITY SERVICE LINES AND PIPES SHALL BE INSTALLED IN A WAY THAT DOES NOT OBSTRUCT OR PREVENT CLEANING OF THE FLOOR OR WALLS OR INTERIORS OF CABINETS. ALL PIPING AND CONDUIT IS REQUIRED TO BE HELD 6" OFF THE FLOOR AND 1" AWAY FROM THE WALLS. EXPOSED ARMOR CABLE OR FLEXIBLE GAS PIPING SYSTEMS ARE NOT ACCEPTABLE AT THE INTERIOR OF CABINETS.

33. UPON SUBSTANTIAL COMPLETION OF THE PROJECT AND PRIOR TO MECHANICAL CONTRACTOR'S REQUEST FOR FINAL INSPECTION, THE CONTRACTOR SHALL FURNISH TO THE GENERAL CONTRACTOR FOR REVIEW, ONE (1) SET OF OPERATION AND MAINTENANCE MANUALS, IN A 3-RING HARD-BACK BINDER AND ELECTRONICALLY, ON TWO (2) THUMB DRIVE MEMORY USB STICKS. O&M MANUALS SHALL MINIMALLY INCLUDE THE FOLLOWING:
   a. INSTALLATION, STARTUP NORMAL SHUTDOWN, EMERGENCY SHUTDOWN, MANUAL OPERATION AND NORMAL AND EMERGENCY OPERATION PROCEDURES, INCLUDING ANY SPECIAL LIMITATIONS, FOR EACH MAJOR PIECE OF EQUIPMENT.
   b. SEQUENCE OF OPERATION AND OPERATING INSTRUCTIONS OUTLINING THE SAFE AND EFFICIENT OPERATION OF EACH MAJOR PIECE OF EQUIPMENT.
   c. EQUIPMENT LIST OF EACH MAJOR PIECE OF EQUIPMENT INCLUDING THE LOCATION, MAKE, MODEL, SERIAL NUMBER (IF APPLICABLE), VOLTAGE, PHASE, # WIRES, AMPACITY AND ALL OTHER INDUSTRY STANDARD NAMEPLATE DATA.
   d. SERVICE INSTRUCTIONS OUTLINING THE RECOMMENDED SPARE PARTS, ALONG WITH THE CONTACT INFORMATION FOR THE LOCAL SUPPLIER AND/OR FACTORY REPRESENTATIVE(S), AND RECOMMENDED PREVENTATIVE AND CORRECTIVE MAINTENANCE, WITH SERVICE PROCEDURES AND SCHEDULES OF EACH MAJOR PIECE OF EQUIPMENT.
   e. SERVICE CONTRACTS ISSUED.
   f. THE NAME, ADDRESS AND TELEPHONE NUMBER OF THE MANUFACTURER AND INSTALLING CONTRACTOR AND THE 24-HOUR NUMBER FOR EMERGENCY SERVICE FOR ALL EQUIPMENT IN THIS SECTION, IDENTIFIED BY EQUIPMENT.
   g. COPIES OF REVIEWED/APPROVED SUBMITTAL DATA, CUT SHEETS, DATA BASE SHEETS AND APPROPRIATE SHOP DRAWINGS. IF SUBMITTAL WAS NOT REQUIRED FOR APPROVAL, DESCRIPTIVE PRODUCT DATA SHALL BE INCLUDED.
   h. AS-BUILT/RECORD DRAWINGS AND DOCUMENTATION.
   i. GUARANTEES/WARRANTIES.
   j. INSPECTION CARDS AND APPROVALS.
   k. NAME OF OWNER, ARCHITECT, ENGINEER OF RECORD, CONTRACTOR AND ALL SUB-CONTRACTORS.

35. AFTER SUBSTANTIAL COMPLETION OF ALL WORK AND ACCEPTANCE BY OWNER, THE MECHANICAL CONTRACTOR SHALL FURNISH THE SERVICES OF AUTHORIZED REPRESENTATIVES OF THE EQUIPMENT MANUFACTURERS WHO SHALL INSTRUCT AND TRAIN THE OWNER'S PERSONNEL IN THE OPERATION AND CONTROL OF ALL EQUIPMENT. TRAINING TIME SHALL BE SUFFICIENT AND TO A LEVEL ACCEPTABLE (INDICATED IN WRITING) TO RESPECTIVE OWNER PERSONNEL BEING TRAINED ON EACH SYSTEM. TRAINING SHALL MINIMALLY INCLUDE THE FOLLOWING SYSTEMS:
   a. ROOFTOP UNITS AND EXHAUST FANS.

MECHANICAL SYMBOL LIST

- SUPPLY AIR DUCT UP
- SUPPLY AIR DUCT DOWN
- RETURN AIR DUCT UP
- RETURN AIR DUCT DOWN
- EXHAUST AIR DUCT UP
- EXHAUST AIR DUCT DOWN
- CHANGE IN DUCT SIZE
- TURNING VANES
- FLEXIBLE DUCT CONNECTION
- HORIZONTAL LIFE SAFETY DAMPER
- VERTICAL LIFE SAFETY DAMPER
- MOTORIZED AUTOMATIC DAMPER (MAD)
- MANUAL DAMPER
- CO2 CARBON DIOXIDE DETECTOR
- CO CARBON MONOXIDE DETECTOR
- H HUMIDISTAT
- S SENSOR (TEMPERATURE OR CO2) 1
- PS PRESSURE SWITCH
- R RETURN AIR SMOKE DETECTOR
- R REF REFRIGERANT (Rxxx) DETECTOR
- RS REFRIGERANT LEAK HORN-STROBE
- T THERMOSTAT
- A PIPE/DUCT IN ATTIC
- B PIPE/DUCT BELOW FLOOR OR GRADE
- C PIPE/DUCT ABOVE CEILING
- E EXPOSED DUCT, W/ MILL PHOSPHATIZED FINISH
- R PIPE/DUCT ON ROOF
- NEW CONNECTION TO EXISTING (VERIFY SIZE AND LOCATION IN FIELD PRIOR TO BID)
- N NEW BRANCH DUCT TAP & CONNECTION TO EXISTING
- DUCT INSULATION (SEE SCHEDULE)
- X3 X

AIR BALANCE - RESTAURANT

EQUIPMENT	EXHAUST CFM	MAKE-UP AIR CFM
EF-1,2	150	
RTU-1		120
RTU-2		600
TOTALS	150	720
SPACE AIR BALANCE		POSITIVE 570

AIR BALANCE - BANQUET

EQUIPMENT	EXHAUST CFM	MAKE-UP AIR CFM
EF-3,4	300	
KEF-1	2000	
KEF-2	2000	
KEF-3	2115	
MAU-1		4892
RTU-3		165
RTU-4		165
RTU-5		710
RTU-6		535
RTU-7		500
TOTALS	6415	6967
SPACE AIR BALANCE		POSITIVE 552

ROOFTOP UNIT SCHEDULE

* TRANE

PLAN MARK	MODEL NUMBER *	CFM	O.A. CFM	E.S.P. IN WG	COOLING CAPACITY TTL/SENS. (MBH)	COOLING CAPACITY EER (SEER)	EVAPORATOR E.A.T. (DB/WB)	EVAPORATOR L.A.T. (DB/WB)	HEATING CAPACITY INPUT (MBH)	HEATING CAPACITY OUTPUT (MBH)	HEATING CAPACITY AFUE	DRIVE	BHP (HP)	RPM	V/PH/HZ	MCA/MOCP	WEIGHT (LBS)	NOTES
RTU-1	YHC047E3RLA	1800	120	0.45	46.18/36.53	17.5	73.67 / 61.44	54.88 / 52.23	60	49	81	DIRECT	0.59	836	208 / 3 / 60	29.4 / 40	976	1
RTU-2	YHC120F3RLA	3700	600	0.5	106.26 / 87.62	12.4	76.05 / 63.44	54.12 / 53.19	150	120	80	DIRECT	0.82	1282	208 / 3 / 60	46.1 / 60	1608	1,2,3,5,6
RTU-3	YHC092F3RLA	2400	165	0.5	82.68 / 60.02	12.6	76.51 / 64.2	53.35 / 52.19	120	96	80	DIRECT	0.60	960	208 / 3 / 60	41.9 / 50	1291	1,4,5
RTU-4	YHC092F3RLA	2400	165	0.5	82.68 / 60.02	12.6	76.51 / 64.2	53.35 / 52.19	120	96	80	DIRECT	0.60	960	208 / 3 / 60	41.9 / 50	1291	1,4,5
RTU-5	YHC092F3RMA	3000	710	0.5	88.38 / 66.92	12.6	77.92 / 64.94	57.27 / 55.02	150	120	80	DIRECT	0.97	1137	208 / 3 / 60	41.9 / 50	1291	1,2,3,5,6
RTU-6	YHC067E3RHA	2000	535	0.5	57.97 / 44.42	17.2	78.69 / 65.54	58.12 / 55.95	130	104	80	DIRECT	0.72	950	208 / 3 / 60	32.2 / 45	999	1,5
RTU-7	YHC102F3RMA	3400	500	0.5	93.73 / 75.34	12.5	75.68 / 63.13	55.16 / 53.53	150	120	80	DIRECT	1.00	1240	208 / 3 / 60	42 / 50	1300	1,2,3,5

NOTES:
1. PROVIDE WITH ROOF CURB, INTEGRATED DIFFERENTIAL ENTHALPY CONTROLLED ECONOMIZER WITH BAROMETRIC RELIEF, FACTORY INSTALLED DISCONNECT AND GFI OUTLET, HAIL GUARDS, AND MINIMUM DUAL STAGE COOLING.
2. PROVIDE WITH SINGLE ZONE VAV CONTROL AND ZONE TEMPERATURE SENSOR.
3. PROVIDE WITH HOT GAS REHEAT AND RETURN AIR HUMIDITY SENSOR.
4. PROVIDE WITH POWER EXHAUST.
5. RETURN AIR SMOKE DETECTOR FURNISHED AND INSTALLED BY E.C.
6. PROVIDE WITH DEMAND CONTROL VENTILATION AND SPACE MOUNTED CO2 SENSOR.

1

EXHAUST FAN SCHEDULE

* LOREN COOK

PLAN MARK	MODEL NUMBER *	CFM	E.S.P. (IN. WG)	HP (WATT)	RPM	DRIVE	SONES	WEIGHT	V/PH/HZ	NOTES
EF-1,2	GC-146	75	0.3	(33)	900	DIRECT	1.5	16	115 / 1 / 60	1
EF-3,4,5,6	GC-186	150	0.4	(68)	894	DIRECT	3.0	17	115 / 1 / 60	1

NOTES: 1. FURNISH FAN WITH FACTORY MOUNTED DISCONNECT, PRE-WIRED FAN SPEED CONTROLLER, BACKDRAFT DAMPER, ISOLATOR KIT, AND ALUMINUM GRILLE.

GRILLE, REGISTER, AND DIFFUSER SCHEDULE

* TITUS

PLAN MARK	MODEL NO. *	NECK SIZE	FACE SIZE	MAX CFM	P.D.	BORDER	PATTERN	FINISH	NOTES
SA1	OMNI	6Ø	24"x24"	135	0.1	TYPE 3	4-WAY	#26	2,4
SA2	OMNI	8Ø	24"x24"	240	0.1	TYPE 3	4-WAY	#26	2,4
SA3	OMNI	10Ø	24"x24"	380	0.1	TYPE 3	4-WAY	#26	2,4
SB1	PAR	12"Ø	24"x24"	400	0.09	TYPE 3	PERF.	#26	4,5
SC1	S300 FL	20"x4"	22"x6"	300	0.1	SPIRAL	2-WAY	#04	3
SC2	S300 FL	26"x4"	28"x6"	410	0.1	SPIRAL	2-WAY	#04	3
SD1	300 RL	6"x6"	8"x8"	140	0.1	TYPE 1	2-WAY	#26	
RA1	355 RL	22"x10"	24"x12"	740	0.08	TYPE 3	-	#26	1,2
RA2	355 RL	22"x22"	24"x24"	1700	0.08	TYPE 3	-	#26	1,2
RB2	50F	26"x26"	28"x28"	3400	0.1	TYPE 3	-	#26	1

NOTES:
1. PROVIDE WITH OPPOSED BLADE BALANCING DAMPER.
2. PROVIDE FRAME WITH NO SCREW HOLES FOR LAY-IN CEILING INSTALLATION.
3. PROVIDE WITH AIR SCOOP DEVICE.
4. SECURE GRILLE/DIFFUSER TO CEILING GRID WITH A MINIMUM OF (4) #10 TECH SCREWS.
5. RETURN GRILLE USED AS SUPPLY TO MINIMIZE AIR CURRENTS NEAR KITCHEN HOODS.

DUCT INSULATION SCHEDULE

ID TAG	MATERIAL K $\frac{BTU\cdot IN}{H\cdot SQ\cdot FT\cdot F}$ AT 75 F. / D $\frac{lB}{FT^3}$	FORM	THICK-NESS	R-VALUE	NO. OF LAYERS	FIELD APPLIED JACKET	VAPOR RETARDER REQUIRED
1	MINERAL-FIBER BLANKET (0.26/0.75)	N/A	1"	3.8	ONE	FOIL & PAPER	YES
3	LINER (0.24/1.5)	N/A	1"	4.2	ONE	NONE	YES
6	SCRIM-ENCAPSULATED FIRE RESISTANT BLANKET (0.24/6.0)	WRAP	1½"	6.3	TWO	NONE	NO

GENERAL NOTE: DUCT SIZES INDICATED ON DRAWINGS ARE SHEET METAL SIZE AND INCLUDE LINER SPECIFIED.

NATURAL GAS CONNECTION SCHEDULE

EQUIPMENT	KITCHEN EQUIPMENT TAG	MECH/PLBG EQUIPMENT TAG	MBH	EQUIPMENT PRESSURE	NOMINAL DELIVERY PRESSURE	NOTES
SMOKER	13	-	82.5	7-14" W.C.	1/2 PSI	1, 2, 3
SMOKER	13	-	82.5	7-14" W.C.	1/2 PSI	1, 2, 3
SMOKER	13	-	82.5	7-14" W.C.	1/2 PSI	1, 2, 3
CONVECTION OVEN	34	-	80.0	7-14" W.C.	1/2 PSI	1, 2, 3
BRAISING PAN	35	-	104.0	7-14" W.C.	1/2 PSI	1, 2, 3
RANGE	41	-	230.0	7-14" W.C.	1/2 PSI	1, 2, 3
CHAR BROILER	42	-	58.0	7-14" W.C.	1/2 PSI	1, 2, 3
GRILL	46	-	120.0	7-14" W.C.	1/2 PSI	1, 2, 3
SALAMANDER BROILER	48	-	30.0	7-14" W.C.	1/2 PSI	1, 2, 3
FRYER	49	-	150.0	7-14" W.C.	1/2 PSI	1, 2, 3
GAS WATER HEATER	-	GWH-1	199.0	7-14" W.C.	1/2 PSI	1, 3
MAKE UP AIR UNIT	-	MAU-1	349.5	7-14" W.C.	1/2 PSI	1, 3
ROOFTOP UNIT	-	RTU-1	60.0	7-14" W.C.	1/2 PSI	1
ROOFTOP UNIT	-	RTU-2	150.0	7-14" W.C.	1/2 PSI	1
ROOFTOP UNIT	-	RTU-3	120.0	7-14" W.C.	1/2 PSI	1
ROOFTOP UNIT	-	RTU-4	120.0	7-14" W.C.	1/2 PSI	1
ROOFTOP UNIT	-	RTU-5	150.0	7-14" W.C.	1/2 PSI	1
ROOFTOP UNIT	-	RTU-6	130.0	7-14" W.C.	1/2 PSI	1
ROOFTOP UNIT	-	RTU-7	150.0	7-14" W.C.	1/2 PSI	1
TOTAL			2448.0			

NOTES:
1. GAS PRESSURE REGULATOR AND FINAL CONNECTION TO ALL EQUIPMENT PROVIDED BY M.C. VENT REGULATOR PER MANUFACTURER'S AND AHJ'S INSTRUCTIONS.
2. PROVIDE FLEXIBLE GAS CONNECTION SAFETY KIT FOR KITCHEN EQUIPMENT, BY M.C. SAFETY KIT SHALL BE SIMILAR TO DORMONT SAFETY SYSTEM, COMPLETE WITH "SAFETY QUIK" DISCONNECT VALVE, SWIVEL, AND SAFETY RESTRAINT CABLE.
3. EQUIPMENT PROVIDED BY OTHERS.

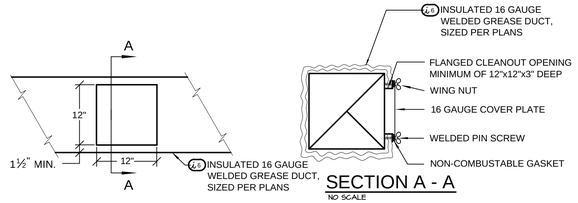

SECTION A - A
NO SCALE

NOTE:
WHEN DUCT DIMENSIONS ARE NOT LARGE ENOUGH TO ACCOMMODATE 12"x12" CLEANOUT, CLEANOUT SHALL BE LOCATED IN ACCORDANCE WITH INTERNATIONAL MECHANICAL CODE 2003 SECTION 506.3.9.

1 / M1.0 DETAIL OF WELDED GREASE DUCT CLEANOUT
NO SCALE

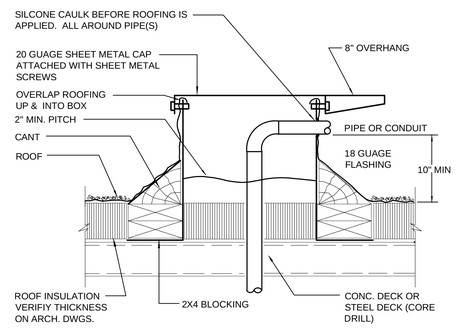

3 / M1.0 PIPING THRU ROOF DETAIL
NO SCALE

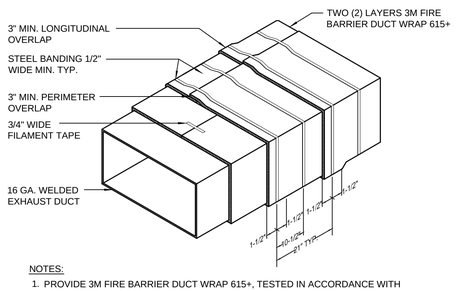

NOTES:
1. PROVIDE 3M FIRE BARRIER DUCT WRAP 615+, TESTED IN ACCORDANCE WITH ASTM E2336 AND ICC-ES AC101.
2. INSTALL PER MANUFACTURER'S INSTALLATION INSTRUCTIONS. INSTALLATION INSTRUCTIONS SHALL BE AVAILABLE ON THE JOB SITE AT ALL TIMES.
3. LAYER 3M FIRE BARRIER DUCT WRAP 615+, AS DETAILED FOR ZERO CLEARANCE TO COMBUSTIBLES.
4. FIELD MEASURE AND PRECUT DUCT WRAP.
5. PROVIDE REMOVABLE PANELS FOR ACCESS TO CLEANOUTS AS REQUIRED BY CODE AND AS NOTED ON PLANS.

2 / M1.0 TYPICAL SECTION THROUGH TYPE I HOOD EXHAUST DUCT
NO SCALE

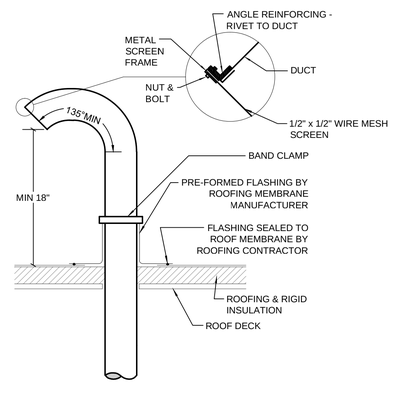

4 / M1.0 GOOSENECK DETAIL
NO SCALE

COPYRIGHT © 2017 BAALMAN ARCHITECTS

BAALMAN ARCHITECTS
#2 Daniel Drive
O'Fallon, MO 63366
ph: 314.640.6212

Michael J. Baalman
ARCHITECT
License#: A-2012004035
Certificate of Authority: 2014003655

STRUCTURAL
AEDIFICA CASE ENGINEERING
796 MERUS COURT
ST. LOUIS, MO 63026
CONTACT: STEVE SACCO, P.E.
PHONE: 636-349-1600
FAX: 636-349-1730

M.E.P.
G&W ENGINEERING INC.
138 WELDON PKWY
MARYLAND HEIGHTS, MO 63043
CONTACT: KEVIN GRIESEMER
PHONE: 314-469-3737

New Restaurant, Banquet Center & Corporate Offices at The Junction for:
Sugarfire Smokehouse
600 West Main
Wentzville, Missouri 63385

DATE	ISSUE	R#
06-15-18	PERMIT / BID SET	
06-26-18	ADDENDUM #1	△

Expiration Date: Dec. 31, 2019

STATE OF MISSOURI
KEVIN S. GRIESEMER
NUMBER PE-23628
PROFESSIONAL ENGINEER

06-26-2018

Kevin S. Griesemer
ENGINEER

DRAWN BY: ASB, JD, DS

PROJECT NUMBER
16-076
DATE
June 15, 2018

SHEET
M1.0

SCHEDULES - MECHANICAL

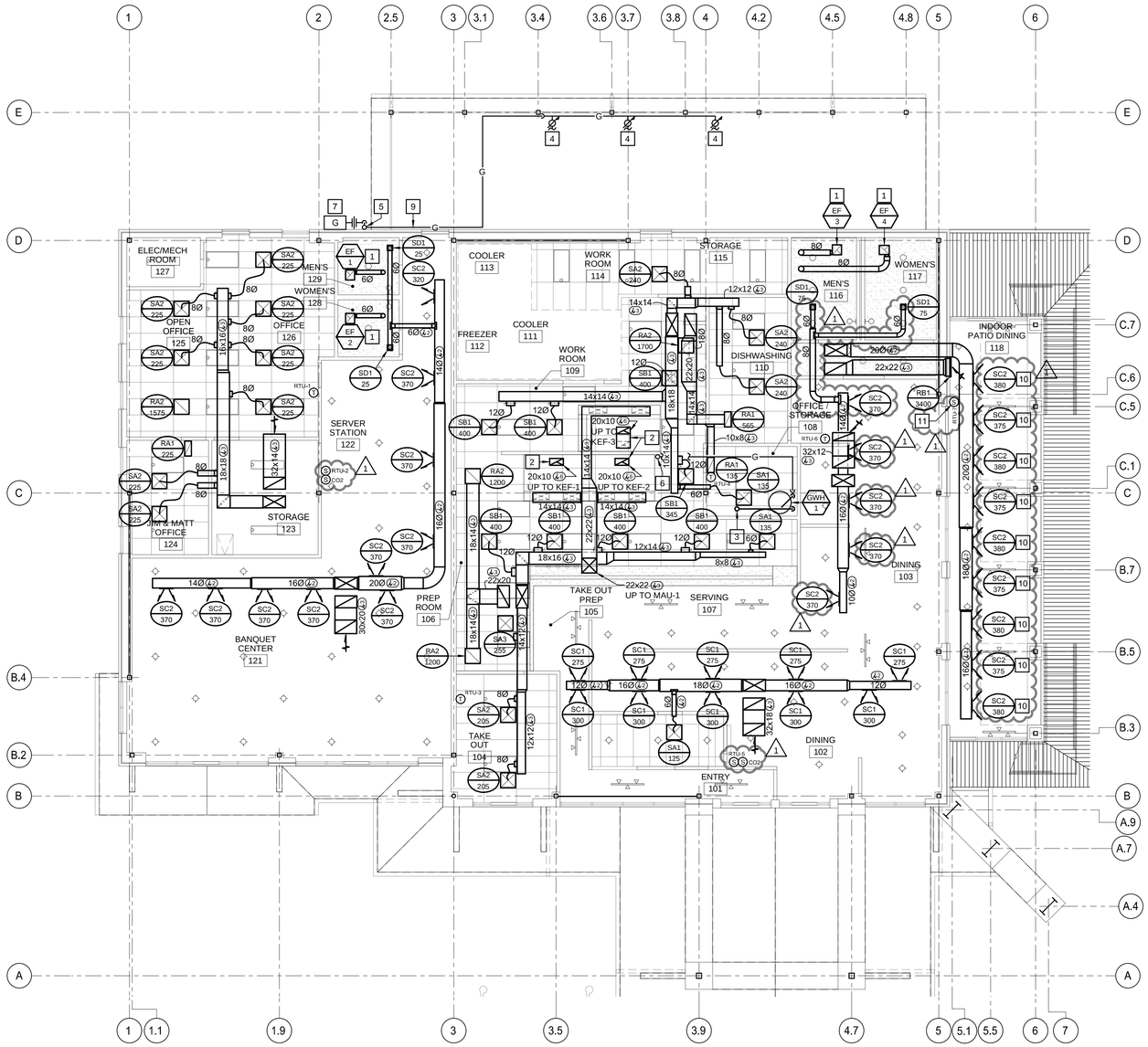

N CEILING PLAN - MECHANICAL

SCALE: 1/8" = 1'-0"

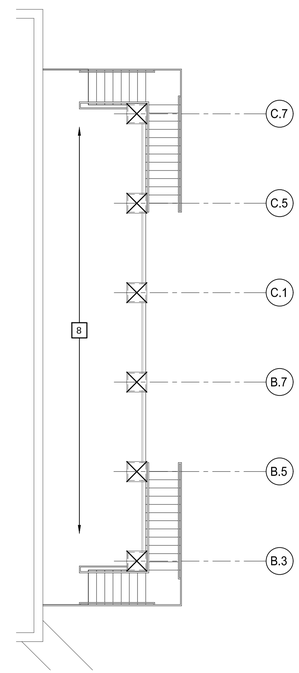

N TERRACE PLAN - MECHANICAL

SCALE: 1/8" = 1'-0"

GENERAL NOTES - MECHANICAL

A. WHERE DUCTS PENETRATE THE ASSEMBLY, FIRE STOP CAULK SHALL BE APPLIED IN ACCORDANCE WITH MANUFACTURES INSTALLATION GUIDELINES AND U.L. LISTED TESTING APPROVALS.

B. THE MECHANICAL CONTRACTOR SHALL PROTECT ALL OPEN DUCT, PIPING, AND MECHANICAL EQUIPMENT FROM CONSTRUCTION DUST AND DIRT. MECHANICAL SYSTEMS SHALL NOT BE OPERATED DURING CONSTRUCTION EXCEPT WHERE WRITTEN APPROVAL IS OBTAINED FROM THE ENGINEER AND OWNER. WHEN APPROVAL IS ISSUED, PROTECT EACH RETURN AIR DUCT OPENING WITH MERV 8 FILTERS AND INSTALL MERV 8 FILTER(S) IN EQUIPMENT FILTER RACK. PRIOR TO TESTING AND BALANCING, REMOVE FILTERS AND INSTALL NEW MERV 8 FILTERS. AT COMPLETION OF CONSTRUCTION, REMOVE CONSTRUCTION FILTERS AND REPLACE EQUIPMENT FILTERS WITH NEW FILTERS.

C. ELBOWS IN MECHANICAL SYSTEMS DUCTS SHALL BE HELD TO A MINIMUM. COORDINATE LOCATION OF DUCTS WITH OTHER TRADE CONTRACTORS PRIOR TO STARTING WORK.

D. ADEQUATE SPACE SHALL BE PROVIDED FOR THE FIRE SUPRESSION SPRINKLER PIPING. COORDINATE DUCT ELEVATIONS WITH FIRE SPRINKLER CONTRACTOR PRIOR TO START OF CONSTRUCTION.

E. COORDINATE DUCT OPENINGS IN THE WALL FRAMING WITH THE FRAMING CONTRACTOR OR FOUNDATION OPENING WITH FOUNDATION CONTRACTOR PRIOR TO START OF CONSTRUCTION.

F. OFFSETS AND TRANSITIONS ARE TO BE PROVIDED FOR COORDINATION WITH OTHER SYSTEMS AND THE BUILDING STRUCTURE.

G. COORDINATE ACTUAL ROUTE OF SUPPLY, RETURN, EXHAUST DUCT, AND MECHANICAL PIPING ROUTES IN THE FIELD. COORDINATE WITH ARCHITECTURAL AND STRUCTURAL CONDITIONS.

H. COORDINATE DUCTWORK DROPS WITH STRUCTURAL COMPONENTS.

I. EQUIVALENT AREA DUCTS AND MODIFICATIONS TO LAYOUT ARE ACCEPTABLE BASED ON FIELD CONDITIONS AND COORDINATION.

J. PRIOR TO THE START OF CONSTRUCTION, THE MECHANICAL CONTRACTOR SHALL COMPLETELY REVIEW AND CONFIRM THE INTENDED RETURN AIR PATH TO MECHANICAL EQUIPMENT IS OPEN AND WILL BE FUNCTIONAL. CONFIRM AGAIN, PRIOR TO THE AIR BALANCE OF THE MECHANICAL SYSTEM.

K. ALL EXPOSED SUPPLY, RETURN, EXHAUST DUCTWORK AND FITTINGS SHALL HAVE MILL PHOSPHATIZED (PAINT GRIP) FINISH FOR FIELD PAINTING BY PAINTING CONTRACTOR. DUCT AND FITTING CONSTRUCTION AND INSTALLATION SHALL BE OIL FREE.

L. COORDINATE LOCATION AND SUPPORTS OF MECHANICAL UNITS WITH OTHER TRADES.

M. ALL RETURN GRILLES TO BE INSTALLED WITH RETURN AIR BOOT. REFER TO DETAIL 11/M101 FOR RETURN BOOT INSTALLATION.

N. SEE GAS PIPE DIAGRAM FOR ALL NATURAL GAS PIPE SIZES.

PLAN NOTES - MECHANICAL

1. PROVIDE CEILING EXHAUST FAN AS SCHEDULED AND SPECIFIED, WITH BACKDRAFT DAMPER, CEILING GRILLE, AND ELECTRICAL DISCONNECT. UNIT SHALL HANG DEAD LEVEL, PROVIDE VIBRATION ISOLATION MOUNTING AND ALL MOUNTING MATERIALS AS REQUIRED. TRANSITION FROM DUCT SIZE SHOWN TO FULL SIZE CONNECTION AT FAN, PROVIDE FLEXIBLE CONNECTION AT FAN. TERMINATE EXHAUST DUCT THROUGH ROOF WITH GOOSENECK.
2. PROVIDE WELDED EXHAUST DUCT FOR TYPE I KITCHEN HOOD. TRANSITION FROM DUCT SIZE SHOWN TO HOOD CONNECTION. INSULATE PER SCHEDULE. INSTALL HORIZONTAL DUCTWORK AT 2% SLOPE TO HOOD CONNECTION. PROVIDE CLEANOUTS PER NFPA 96.
3. 4" PVC COMBUSTION AIR AND VENT EXHAUST PIPE FROM GAS WATER HEATER, EXTEND THROUGH WALL. INSTALL AND ROUTE COMBUSTION AIR AND VENT EXHAUST PIPE PER WATER HEATER MANUFACTURER'S WRITTEN INSTRUCTIONS.
4. EXTEND GAS PIPING TO SMOKERS AS SHOWN.
5. NATURAL GAS PIPE UP TO ROOF, SEE SHEET M3.0 FOR CONTINUATION.
6. GAS PIPE DROP TO KITCHEN EQUIPMENT, PROVIDE WITH AUTOMATIC EMERGENCY GAS SHUTOFF VALVE AND DIRT LEG. INTERLOCK AUTOMATIC SHUTOFF VALVE AND ELECTRIC SOLENOID WITH HOOD FIRE SUPPRESSION SYSTEM. GAS PIPE CONNECTION TO KITCHEN EQUIPMENT BY MECHANICAL CONTRACTOR. SEE KITCHEN EQUIPMENT DRAWINGS FOR REQUIREMENTS.
7. EXTEND GAS PIPING TO METER AND PROVIDE 2 PSI PRESSURE GAS METER PER THE LOCAL UTILITY COMPANY AND AUTHORITY HAVING JURISDICTION REQUIREMENTS.
   PROPOSED LOAD TO BUILDING: 2448.0 CFH
   PROPOSED DELIVERY PRESSURE: 2 PSI
   COORDINATE GAS SYSTEM REQUIREMENTS WITH THE LOCAL UTILITY COMPANY. PROVIDE ALL PIPING, VALVES, ASSOCIATED MATERIALS AND PRESSURE REDUCING VALVES AS REQUIRED TO PROVIDE THE PROPOSED DELIVERY PRESSURE TO THE BUILDING. PAINT ALL GAS PIPING, VALVES AND MATERIALS EXPOSED TO THE ELEMENTS WITH RUST INHIBITING PAINT TO MATCH THE COLOR OF THE BUILDING EXTERIOR. VERIFY COLOR WITH ARCHITECT PRIOR TO PAINTING.
8. NO MECHANICAL WORK IN THIS AREA.
9. ROUTE GAS PIPING ALONG WALL, UNDER CANOPY TO SMOKERS AS SHOWN.
10. ADJUST DIFFUSER BLADES TO 45° THROW.
11. ZONE SENSOR TO BE MANUALLY ADJUSTED TO SHUT DOWN RTU-7 WHEN MANUAL WINDOW SYSTEM IS OPENED BY STAFF.

COPYRIGHT © 2017 BAALMAN ARCHITECTS

BAALMAN ARCHITECTS
#2 Daniel Drive
O'Fallon, MO 63366
ph: 314.640.6212

Michael J. Baalman
ARCHITECT
License#: A-2012004035
Certificate of Authority: 2014003655

STRUCTURAL
AEDIFICA CASE ENGINEERING
796 MERUS COURT
ST. LOUIS, MO 63026
CONTACT: STEVE SACCO, P.E.
PHONE: 636-349-1600
FAX: 636-349-1730

M.E.P.
G&W ENGINEERING INC.
138 WELDON PKWY
MARYLAND HEIGHTS, MO 63043
CONTACT: KEVIN GRIESEMER
PHONE: 314-469-3737

New Restaurant, Banquet Center & Corporate Offices at The Junction for:
Sugarfire Smokehouse
600 West Main
Wentzville, Missouri 63385

DATE	ISSUE	R#
06-15-18	PERMIT / BID SET	△
06-26-18	ADDENDUM #1	

Expiration Date: Dec. 31, 2019

STATE OF MISSOURI
KEVIN S. GRIESEMER
NUMBER PE-23628
PROFESSIONAL ENGINEER

06-26-2018

Kevin S. Griesemer
ENGINEER

DRAWN BY: ASB, JD, DS

PROJECT NUMBER
16-076
DATE
June 15, 2018

SHEET
M2.0

CEILING PLAN - MECHANICAL

PLUMBING CRITERIA

P1 BEFORE SUBMITTING A PROPOSAL, THE PLUMBING CONTRACTOR SHALL VISIT THE SITE OF WORK AND BECOME FAMILIAR WITH ALL SITE CONDITIONS. PLUMBING CONTRACTOR SHALL CAREFULLY EXAMINE ALL CIVIL, ARCHITECTURAL, STRUCTURAL, MECHANICAL, AND ELECTRICAL CONSTRUCTION DOCUMENTS. SUBMISSION OF A BID WILL ACKNOWLEDGE THE PLUMBING CONTRACTOR HAS VISITED THE SITE AND EXAMINED ALL CONSTRUCTION DOCUMENTS AND BID INSTRUCTIONS. ALL PLUMBING WORK IN THE CONSTRUCTION DOCUMENTS, AND REQUIRED BY OTHER DIVISIONS, GENERALLY INSTALLED BY THE PLUMBING CONTRACTOR, WHERE EQUIPMENT IS PROVIDED BY OTHERS, SHALL BE INCLUDED. IT IS EXPRESSLY UNDERSTOOD THAT THIS PROPOSAL IS BASED ON THE ABOVE REQUIREMENTS AND THAT IT COVERS EVERYTHING NECESSARY TO COMPLETE THE SCOPE OF WORK DESCRIBED.

P2 PLUMBING CONTRACTOR SHALL REQUEST CLARIFICATION ON ANY ITEM(S) OF THE CONTRACT DOCUMENTS THAT ARE NOT UNDERSTOOD OR WHERE CONFLICTS MAY EXIST. CLARIFICATIONS MUST BE PRESENTED AS A "REQUEST FOR INFORMATION" (RFI) IN WRITING PRIOR TO SUBMITTING A BID. RFI SHALL BE PRESENTED A MINIMUM OF FIVE (5) WORKING DAYS BEFORE THE BID DATE. OBTAIN THE RFI FORM AT HTTPS://WWW.GANDWENGINEERING.COM/DOCUMENTS . SUBMISSION OF A BID WILL ACKNOWLEDGE THE PLUMBING CONTRACTOR UNDERSTANDS THE SCOPE OF WORK, MEANS AND METHODS OF INSTALLATION, AND MATERIALS TO BE USED. RFI THAT HAVE NOT BEEN CLARIFIED PRIOR TO BID, WILL BE PROVIDED BY THE PLUMBING CONTRACTOR, AS DIRECTED BY THE ENGINEER OF RECORD, AND THE MOST STRINGENT MATERIALS, EQUIPMENT, AND SCOPE OF WORK SHALL APPLY. NO ADDITIONAL COMPENSATION WILL BE MADE FOR THE FAILURE OF THE CONTRACTOR TO OBTAIN CLARIFICATIONS PRIOR TO BID.

P3 THE EQUIPMENT, MATERIALS, AND MANUFACTURERS SCHEDULED IN THE CONTRACT DOCUMENTS SHALL FORM THE BASIS OF DESIGN. THE PLUMBING CONTRACTOR SHALL BASE HIS BID ON THE SCHEDULED MATERIALS AND EQUIPMENT. ALL OTHER EQUIPMENT, MATERIALS, AND MANUFACTURERS, ARE CONSIDERED SUBSTITUTIONS. PROPOSED SUBSTITUTIONS MAY BE SUBMITTED FOR REVIEW AFTER THE ENGINEER HAS RECEIVED A SUBSTITUTION REQUEST FORM. OBTAIN THE SUBSTITUTION REQUEST FORM AT HTTPS://WWW.GANDWENGINEERING.COM/DOCUMENTS , THE PLUMBING CONTRACTOR SHALL MAKE NO PRIOR ASSUMPTIONS ON SUBSTITUTIONS NOT APPROVED BY THE ENGINEER. APPROVALS OF SUBSTITUTIONS ARE CONTINGENT UPON ENGINEER'S REVIEW. SHOULD THE ENGINEER APPROVE A SUBSTITUTION REQUEST, THE PLUMBING CONTRACTOR WILL BE HELD RESPONSIBLE FOR ENGINEERING COSTS, PHYSICAL SIZE, CAPACITIES, COORDINATION, SUPPLEMENTAL DRAWINGS AND INFORMING OTHER TRADE CONTRACTORS RELATED TO THE INSTALLATION AS TO ANY SPECIFIED ITEM CHANGES. THE PLUMBING CONTRACTOR SHALL BEAR AS PART OF HIS CONTRACT, ANY ADDITIONAL COSTS INCURRED IN HIS WORK OR BY THE OTHER CONTRACTORS AS A RESULT OF SUBSTITUTIONS TO THE BASIS OF DESIGN.

P4 PLUMBING CONTRACTOR SHALL PERFORM WORK IN A SAFE MANNER. COMPLY WITH APPLICABLE OSHA SAFETY GUIDELINES DURING THE COURSE OF COMPLETING THE WORK DESCRIBED ON THESE CONSTRUCTION DOCUMENTS.

P5 SHOP DRAWINGS SHALL BE SUBMITTED ELECTRONICALLY AS PDF FILES. SHOP DRAWINGS SHALL INCLUDE TRANSMITTAL PAGE(S) INDICATING THE NAME OF THE PROJECT, AND THE NAME, ADDRESS, AND PHONE NUMBER OF THE GENERAL AND PLUMBING CONTRACTORS. GENERAL CONTRACTOR AND PLUMBING CONTRACTOR SHALL REVIEW SHOP DRAWING SUBMITTALS FOR COMPLIANCE, CONTENT AND COMPLETENESS AND PROVIDE A STAMP WITH THE DATE OF REVIEW AND SIGNATURE OF THE REVIEWER. TRANSMITTAL PAGE SHALL HAVE INDEX WITH SPECIFICATION SECTION AND DESCRIPTION OF SUBMITTED ITEMS. NO EXCEPTIONS WILL BE TAKEN. SHOP DRAWINGS NOT SUBMITTED IN THIS FORMAT WILL BE REJECTED AND WILL NOT CAUSE REASON FOR PROJECT DELAYS. EQUIPMENT SHALL NOT BE ORDERED UNTIL ENGINEER OF RECORD HAS PROCESSED APPLICABLE SHOP DRAWINGS. A PERIOD OF TEN BUSINESS DAYS WILL BE ALLOWED FOR SUBMITTAL PROCESSING BY THE ENGINEER. REFER TO ARCHITECT'S GENERAL REQUIREMENTS FOR ADDITIONAL REQUIREMENTS. PLUMBING SUBMITTALS REQUIRED SHALL MINIMALLY INCLUDE THE FOLLOWING:

a. SEISMIC PIPING SUPPORTS AND DETAILS
b. GAS FIRED HOT WATER HEATER
c. THERMOSTATIC MIXING VALVE
d. RECIRCULATION PUMP
e. EXPANSION TANK
f. DOMESTIC WATER PIPING
g. DOMESTIC WATER INSULATION
h. DOMESTIC WATER VALVES
i. SANITARY WASTE/VENT PIPING
j. PLUMBING FIXTURES
k. FLOOR DRAINS
l. FLOOR SINKS
m. CLEANOUTS
n. GREASE INTERCEPTOR

P6 THE PLUMBING CONTRACTOR SHALL HAVE ACCESS TO ELECTRONIC FILES OWNED AND/OR CREATED BY G&W ENGINEERING CORPORATION IN PREPARATION OF CONTRACTOR'S SUBMITTALS OR OTHER APPROVED USE. THE USE OF THESE FILES REQUIRES A SIGNED "RELEASE" FORM AGREEING TO ALL TERMS AND CONDITIONS OUTLINED ON THE FORM AND ASSOCIATED DISCLAIMER. THE SIGNED FORM SHALL BE RECEIVED BY G&W ENGINEERING CORPORATION PRIOR TO SHARING ANY ELECTRONIC MEDIA AND/OR DATA. IN ACCEPTING, OPENING, COPYING, AND/OR USING ANY DRAWINGS, REPORTS, OR DATA IN ANY FORM OF ELECTRONIC MEDIA GENERATED AND TRANSMITTED OR FURNISHED BY G&W ENGINEERING CORPORATION, THE RECIPIENT AGREES THAT ALL SUCH ELECTRONIC FILES ARE INSTRUMENTS OF SERVICE OF G&W ENGINEERING CORPORATION, WHO SHALL BE DEEMED THE AUTHOR, AND SHALL RETAIN ALL COMMON LAW, STATUTORY LAW, AND OTHER RIGHTS, INCLUDING COPYRIGHTS. THE RECIPIENT ALSO AGREES NOT TO TRANSFER THESE ELECTRONIC FILES TO OTHERS WITHOUT THE PRIOR WRITTEN CONSENT OF G&W ENGINEERING CORPORATION. G&W ENGINEERING CORPORATION MAKES NO WARRANTIES, EITHER EXPRESSED OR IMPLIED, OF THE ACCURACY OR FITNESS FOR USE FOR ANY PARTICULAR PURPOSE. THE RECIPIENT AGREES THAT ANY USE OF THESE ELECTRONIC FILES IS AT THEIR OWN RISK. IN NO EVENT SHALL G&W ENGINEERING CORPORATION BE LIABLE FOR DIRECT, INDIRECT, OR CONSEQUENTIAL DAMAGES AS A RESULT OF THE RECIPIENT'S USE OR REUSE OF THE ELECTRONIC FILES. G&W ENGINEERING CORPORATION SHALL BE HELD HARMLESS AGAINST ALL DAMAGES, LIABILITIES, OR COSTS, INCLUDING REASONABLE ATTORNEYS' FEES AND DEFENSE COSTS, ARISING OUT OF OR RESULTING FROM USE OF THESE ELECTRONIC FILES.

P7 SUBMIT AND PAY FOR ALL REQUIRED WORK PERMITS. PROVIDE ALL REQUIRED INSPECTIONS AND RE-INSPECTIONS. PROVIDE A SIGNED CERTIFICATE OF INSPECTION AT THE PROJECT COMPLETION.

P8 PLUMBING CONTRACTOR SHALL UTILIZE DIMENSIONED ARCHITECTURAL DRAWINGS AND ELEVATIONS FOR THE LAYOUT OF PLUMBING FIXTURES. REVIEW ARCHITECTURAL LAYOUT AND ELEVATIONS PRIOR TO STARTING CONSTRUCTION. ANY DISCREPANCIES SHALL BE SUBMITTED TO THE ARCHITECT FOR CLARIFICATION THROUGH AN RFI PRIOR TO STARTING THE WORK.

P9 ALL EQUIPMENT AND MATERIALS SHALL BE SPECIFICALLY PROVIDED PER WRITTEN INSTALLATION INSTRUCTIONS AS PUBLISHED BY THE MANUFACTURER OF THE EQUIPMENT OR MATERIAL PROVIDER. MEANS AND METHODS OF INSTALLATION ARE TO BE PROVIDED BY THE PLUMBING CONTRACTOR. PLUMBING CONTRACTOR SHALL UNDERSTAND THE PRODUCT, MEANS AND METHODS OF INSTALLATION. THE PLUMBING CONTRACTOR SHALL OBTAIN THE INSTALLATION INSTRUCTIONS AND REQUIREMENTS PRIOR TO BID. ALL RFI AND CLARIFICATIONS OF SCOPE DURING CONSTRUCTION WHERE THE CONTRACTOR HAS NOT PREVIOUSLY OBTAINED THIS INFORMATION FOR BIDDING PURPOSES WILL NOT BE CAUSE FOR ADDITIONAL COSTS OR CONSTRUCTION DELAY.

P10 PLUMBING CONTRACTOR SHALL PROVIDE FIELD COORDINATION WITH OTHER TRADES; SYSTEMS AS SHOWN ARE DIAGRAMMATIC AND GIVE THE GENERAL ARRANGEMENT AND LOCATIONS ONLY. PLUMBING CONTRACTOR SHALL COMPLETELY REVIEW ARCHITECTURAL DRAWINGS, STRUCTURAL DRAWINGS, AND SYSTEMS DRAWINGS OF OTHER TRADES FOR DETAILS OF CONSTRUCTION. ROUGH-IN OF PLUMBING FIXTURES, EQUIPMENT, PIPING, ATTACHMENTS, AND HANGERS SHALL BE BASED ON THIS REVIEW. EXACT LOCATIONS AND FINAL LAYOUT SHALL BE DETERMINED IN THE FIELD, PROVIDE ALL NECESSARY EQUIPMENT, CLEANOUTS, FITTINGS, HANGERS, SUPPORTS, AND OFFSETS REQUIRED FOR A COMPLETE INSTALLATION IN ALL RESPECTS. THE PLUMBING CONTRACTOR MEANS AND METHODS OF INSTALLATION SHALL PROVIDE FOR OPERATING EFFICIENCY, NEATNESS OF APPEARANCE, AND EASE OF MAINTENANCE. THE PLUMBING CONTRACTOR WILL PREPARE DIMENSIONED FIELD ERECTION DRAWINGS WHERE REQUIRED FOR USE BY THE INSTALLERS, TO ENSURE PROPER INSTALLATION AND COORDINATION. THE PLUMBING CONTRACTOR SHALL TAKE THEIR OWN MEASUREMENTS AT THE BUILDING, AND BE RESPONSIBLE FOR THE CORRECT LAYOUT, INTERPRETATION, AND USE OF ALL SIZES AND DIMENSIONS. THE CONTRACTOR SHALL KEEP "AS-BUILT" INFORMATION DURING CONSTRUCTION AND FURNISH TO THE OWNER OR TENANT A RECORD SET OF LEGIBLE BLACK LINE PRINTS AND AN ELECTRONIC COPY OF THESE DOCUMENTS AT THE PROJECT COMPLETION.

P11 REVIEW ARCHITECTURAL DRAWINGS FOR ALL FIRE RATINGS AND FIRE RATED ASSEMBLIES PRIOR TO BIDDING THE PROJECT. PROVIDE FIRE STOP AT EACH RATED WALL, FLOOR AND CEILING-ROOF ASSEMBLY PENETRATION. FIRE STOP SYSTEMS SHALL BE MANUFACTURED BY "3M". PROVIDE IN STRICT COMPLIANCE WITH THE MANUFACTURER'S APPLICATION DETAILS AND INSTRUCTIONS. PROVIDE INSTALLER CERTIFICATION SIGNS AT EACH PENETRATION. PROVIDE SHOP DRAWINGS FOR REVIEW WITH THE U.L. LISTING AND TEST CRITERIA. PROVIDE FIRE STOPPING WHERE REQUIRED BY THE AHJ. EQUAL SYSTEMS AS MANUFACTURED BY "SPEC SEAL" OR "HILTI" WILL BE ACCEPTABLE.

P12 PROVIDE PIPING, AND HANGER PENETRATIONS OF NON-RATED ASSEMBLIES WITH DRAFT STOPPING, OR SMOKE BARRIER SEALANT SYSTEMS. THROUGH PENETRATION SEALANT SYSTEMS SHALL BE MANUFACTURED BY "3M". APPLY IN STRICT COMPLIANCE WITH THE MANUFACTURER'S APPLICATION DETAILS AND INSTRUCTIONS. PROVIDE DRAFT STOPPING OR SMOKE BARRIER SEALANTS TO MEET APPROVAL OF THE AHJ. EQUAL SYSTEMS AS MANUFACTURED BY "SPEC SEAL" OR "HILTI" WILL BE ACCEPTABLE.

P13 PLUMBING CONTRACTOR SHALL GUARANTEE ALL EQUIPMENT AND MATERIAL INSTALLED UNDER THIS CONTRACT TO BE FREE FROM DEFECTS AND WORKMANSHIP FOR A PERIOD OF ONE YEAR FROM DATE OF FINAL ACCEPTANCE AND SHALL REPAIR OR REPLACE WITHOUT COST TO THE OWNER OR TENANT ANY EQUIPMENT WHICH IS DEFECTIVE, OR IMPROPERLY INSTALLED. IN ADDITION THIS CONTRACTOR SHALL ASSUME FULL RESPONSIBILITY FOR ANY DAMAGE TO THE BUILDING AND ITS CONTENTS OR OTHER EQUIPMENT CAUSED BY DEFECTS OR IMPROPER INSTALLATION OF EQUIPMENT OR MATERIALS INSTALLED IN THIS PROJECT.

P14 INSTALL PIPE SLEEVES FOR PIPES PENETRATING FLOORS, PARTITIONS, ROOFS, AND WALLS, EXCEPT CORE DRILLED CONCRETE. INSTALL SLEEVES IN CONCRETE FLOORS, CONCRETE ROOF SLABS, AND CONCRETE WALLS AS NEW SLABS AND WALLS ARE CONSTRUCTED.

P15 PROVIDE STANDARD WEIGHT CAST IRON SOIL PIPE MANUFACTURED PER "CISPI STANDARDS" AND BEARING THIS TRADEMARK. PROVIDE STANDARD NO-HUB FITTINGS FOR ALL CAST IRON DWV PIPING SYSTEMS. SCHEDULE 40 PVC DWV SYSTEM MAY BE INSTALLED WHERE ACCEPTABLE TO THE LOCAL AHJ. PVC PIPE AND DWV FITTINGS SHALL BE SOLVENT WELDED IN ACCORDANCE WITH MANUFACTURER'S INSTALLATION INSTRUCTIONS. INSTALL DWV SYSTEM WITHIN TEMPERATURE CONDITIONS AS SPECIFIED BY THE MANUFACTURER. PROVIDE CLEANOUTS IN STRICT ACCORDANCE WITH PLUMBING CODE. PROVIDE CLEANOUT TEE AND CHROME ACCESS COVER IN BASE OF EACH VENT STACK. FLASH VENTS THROUGH ROOF WITH 12LB. SHEET LEAD FLASHING OR NEOPRENE RUBBER GROMMET FLASHING. TEST ALL DWV AND STORM DRAIN PIPING PER REQUIREMENTS OF THE AHJ OR AS A MINIMUM TO TEN (10) FEET HEAD OF WATER FOR AT LEAST 2 HOURS WITH NO LEAKS BEFORE COVERING. CAST IRON NO-HUB IS REQUIRED ABOVE CEILINGS OR IN CAVITIES USED AS AN ENVIRONMENTAL AIR PLENUM; NO PVC PIPING WILL BE ALLOWED IN A ENVIRONMENTAL AIR PLENUM. INSULATE ROOF DRAIN LEADER AND HORIZONTAL *RUNS* OF STORM DRAIN PIPING PER THE PIPING INSULATION SCHEDULE ON THE DRAWINGS. REFER TO ARCHITECTURAL AND MECHANICAL CONSTRUCTION DRAWINGS TO DETERMINE WHERE RETURN AIR PLENUM LOCATIONS OCCUR IN THIS PROJECT PRIOR TO BID, BACKFILL INSIDE BUILDINGS SHALL BE CLEAN 3 /4" GRANULAR LIMESTONE.

P16 WATER PIPING SHALL BE COPPER AS SCHEDULED ON THE DRAWINGS. SHUT-OFF VALVES SHALL BE BRONZE BODY NIBCO C-580 BALL VALVES RATED FOR 125LB.WORKING PRESSURE OR INDUSTRY STANDARD EQUAL. TEST WATER PIPING PER THE AHJ REQUIREMENTS OR AT A MINIMUM TO 125LB. FOR AT LEAST 24 HOURS WITH NO LEAKS BEFORE COVERING.

P17 INSULATE COLD, HOT, AND HOT WATER RETURN PIPING AS SCHEDULED ON THE DRAWINGS. PROVIDE WATER HAMMER ARRESTORS ON THE COLD AND HOT WATER SUPPLIES FOR EACH PLUMBING FIXTURE. WATER HAMMER ARRESTORS SHALL BE EQUAL TO "SIOUX CHIEF" HYDRA-RESTER SIZED AND INSTALLED IN ACCORDANCE WITH THE MANUFACTURES INSTALLATION INSTRUCTIONS AND SIZING GUIDELINES.

P18 PROVIDE STRUCTURAL STEEL FRAMEWORK, STRUT, CABLES, HARDWARE, AND HANGING RODS WITH BRACES AND ACCESSORIES WHERE REQUIRED TO HOLD EQUIPMENT IN FINAL POSITION. PROVIDE STEEL SHAPES AND FRAMES TO SUPPORT WALL MOUNTED EQUIPMENT WHERE NORMAL WALL STRENGTH MAY BE INADEQUATE. COORDINATE BLOCKING AND FRAMING WITH THE G.C. AND PROVIDE SEISMIC ANCHORS AND SWAY BRACING IN ACCORDANCE WITH 2015 IBC. PROVIDE ENGINEERED SEISMIC RESTRAINT DETAILS SIGNED AND SEALED BY A MISSOURI LICENSED ENGINEER. SUBMIT FOR REVIEW BY ENGINEER OF RECORD.

P19 PLUMBING SCOPE OF WORK SHALL BE PROVIDED TO COMPLY WITH THE CURRENT EDITION OF THE ADOPTED PLUMBING CODE, GOVERNING STATE LAW, FEDERAL LAW, AND ALL LOCAL ORDINANCES. REFER TO THE ARCHITECTURAL CODE BLOCK AND THE MUNICIPALITY WEBSITE FOR THE APPLICABLE CODE AND ADOPTED ORDINANCES PRIOR TO BID. SUBMISSION OF A BID ACKNOWLEDGES YOU HAVE PERFORMED THIS REQUIREMENT AND YOUR BID INCLUDES LABOR AND MATERIAL TO PROVIDE THIS COMPLIANCE.

P20 THE LANDLORD'S CONSTRUCTION CRITERIA, LEASE AGREEMENT, AND CONSTRUCTION STANDARDS ARE HERE-IN MADE PART OF THIS CONTRACT. ALL REQUIREMENTS IN THE LANDLORD'S CONSTRUCTION CRITERIA, LEASE AGREEMENT, AND CONSTRUCTION STANDARDS REFERRED TO AS TENANT WORK IS DEFINED AS DIVISION 15 PLUMBING WORK AND IS TO BE PROVIDED BY THE PLUMBING CONTRACTOR. IT IS THE RESPONSIBILITY OF THE PLUMBING CONTRACTOR TO OBTAIN COPIES OF THESE DOCUMENTS AND COMPLETELY FAMILIARIZE HIMSELF WITH THESE DOCUMENTS PRIOR TO BIDDING THIS PROJECT. SUBMISSION OF A BID ACKNOWLEDGES THE WORK CONTRACTOR HAS COMPLIED WITH THIS REQUIREMENT OF THE CONTRACT.

P21 THE KITCHEN EQUIPMENT DRAWINGS AND EQUIPMENT MANUFACTURERS ENGINEERING TECHNICAL SHEETS ARE MADE PART OF THIS CONTRACT. ALL PLUMBING REQUIREMENTS ON THE KITCHEN EQUIPMENT DRAWINGS SHALL BE PROVIDED BY THE PLUMBING CONTRACTOR AS IT RELATES TO DIVISION 15. IT IS THE RESPONSIBILITY OF THE PLUMBING CONTRACTOR TO OBTAIN COPIES OF THESE DOCUMENTS AND COMPLETELY FAMILIARIZE HIMSELF WITH THESE DOCUMENTS PRIOR TO BIDDING THIS PROJECT. SUBMISSION OF A BID ACKNOWLEDGES THE WORK CONTRACTOR HAS REVIEWED ALL KITCHEN EQUIPMENT INFORMATION AND THIS BID INCLUDES ALL EQUIPMENT AND LABOR NECESSARY TO COMPLETE CONNECTIONS OF THE KITCHEN EQUIPMENT. WHEN PLUMBING DRAWINGS AND KITCHEN EQUIPMENT DRAWINGS CONFLICT, THE MOST STRINGENT REQUIREMENTS APPLY AND THIS CONTRACTOR SHALL REQUEST CLARIFICATION BY RFI PRIOR TO STARTING CONSTRUCTION. EXPOSED UTILITY SERVICE LINES AND PIPES SHALL BE INSTALLED IN A WAY THAT DOES NOT OBSTRUCT OR PREVENT CLEANING OF THE FLOOR OR WALLS OR INTERIORS OF CABINETS. ALL PIPING IS REQUIRED TO BE 6" OFF THE FLOOR AND 1" AWAY FROM THE WALLS.

P22 Plumbing Fixtures

ALL FIXTURES INCLUDED IN THIS PROJECT SHALL BE PROVIDED BY THE PLUMBING CONTRACTOR UNLESS OTHERWISE NOTED. PROVIDE ALL NECESSARY HANGERS, BOLTS, ANCHORS, STEEL ANGLE, AND BRACKETS. ALL FIXTURES SHALL BE PROPERLY CONNECTED TO DWV SYSTEM AND WATER LINES AND SHALL BE INSTALLED IN AN ABSOLUTELY RIGID AND SUBSTANTIAL MANNER, WITHOUT DAMAGE TO ANY ADJOINING WORK OR FINISH. PROVIDE SPECIFICATION GRADE SEALANT AT ALL WALL AND FLOOR CONNECTIONS COMPATIBLE WITH THE COLOR OF THE PLUMBING FIXTURE AND FINISH. COORDINATE WITH ARCHITECT PRIOR TO INSTALLATION.

"ADA" WATER CLOSETS SHALL BE PROVIDED BY THE EQUIPMENT SUPPLIER WITH THE CORRECT FLUSH HANDLE ORIENTATION. THE EQUIPMENT SUPPLIER AND PLUMBING CONTRACTOR SHALL ASSURE THIS COORDINATION. THE CONTRACTOR IS RESPONSIBLE FOR THIS COORDINATION AND SHOP DRAWING PROCESSING ACKNOWLEDGES THE PLUMBING CONTRACTOR HAS CORRECTLY ORDERED THE CORRECT FLUSH HANDLE ORIENTATION, NO EXCEPTIONS OR EXCLUSIONS.

ALL WALL-HUNG PLUMBING FIXTURES SHALL BE PROVIDED WITH FIXTURE CARRIERS SECURED TO THE CONCRETE FLOOR SLAB. SUBMIT THE ANCHORING SYSTEM AS PART OF THE PLUMBING FIXTURE SUBMITTALS.

ALL FAUCETS SHALL BE FURNISHED AND INSTALLED WITH UNION TAILPIECES FOR CONNECTION TO SUPPLIES. SLIP JOINTS OR GASKETED JOINTS WILL NOT BE PERMITTED.

ALL FIXTURES SHALL BE INDEPENDENTLY VALVED WITH EITHER INTEGRAL STOPS, CONCEALED STOPS OR STOPS BELOW THE FIXTURES. ALL PLUMBING FIXTURES SHALL HAVE CHROME PLATED BRASS TRIM UNLESS OTHERWISE SPECIFIED.

FIXTURES SHALL BE FURNISHED AS INDICATED ON THE DRAWINGS. "BASIS OF DESIGN" IS AMERICAN STANDARD, SIMILAR AND EQUAL CHINA FIXTURES MANUFACTURED BY KOHLER, CRANE, TOTO, AND ELJER WILL BE ACCEPTABLE FOR REVIEW BY THE ENGINEER. THE SUBSTITUTION REQUEST FORM IS NOT REQUIRED FOR ALTERNATE MANUFACTURES UNLESS NOTES SPECIFICALLY STATE "NO SUBSTITUTIONS". SIMILAR AND EQUAL STAINLESS STEEL FIXTURES BY JUST WILL BE ACCEPTABLE FOR REVIEW. SIMILAR AND EQUAL TERRAZZO OR MOLDED STONE PRODUCTS BY STERN WILLIAMS AND SWAN WILL BE ACCEPTABLE FOR REVIEW.

FAUCETS OF SIMILAR DESIGN AND EQUAL QUALITY TO THAT SPECIFIED BY KOHLER, MOEN, CHICAGO FAUCET, T&S BRASS, AND SYMMONS WILL BE ACCEPTABLE FOR REVIEW. THE SUBSTITUTION REQUEST FORM IS NOT REQUIRED FOR ALTERNATE MANUFACTURES UNLESS NOTES SPECIFICALLY STATE "NO SUBSTITUTIONS"

FIXTURES SHALL BE PROVIDED AS INDICATED ON THE DRAWINGS. PLUMBING FIXTURES, TRIM AND RELATED APPURTENANCES AND FLOOR DRAINS LISTED IN THE FIXTURE SCHEDULE ARE SELECTED TO ESTABLISH THE BASIS OF DESIGN AND A LEVEL OF QUALITY EXPECTED.

PROVIDE A TRAP PRIMER FOR EACH TYPE OF FLOOR DRAIN. TRAP PRIMER SHALL BE EQUIVALENT TO JOSAM 88250. LOCATE THIS IN A PLUMBING WALL BEHIND AN ACCESS PANEL PROVIDED BY THE P.C. COORDINATE THE LOCATION WITH THE ACCESS PANEL WITH THE ARCHITECT PRIOR TO STARTING CONSTRUCTION.

SIMILAR DRAINS BY J.R. SMITH, ZURN, AND WADE WILL BE ACCEPTABLE.

ALL FLOOR DRAINS SHALL HAVE TOPS SET 1/2" BELOW FLOOR SLAB ELEVATION AND FLATWORK SUB-CONTRACTOR SHALL SLOPE FLOOR TO DRAIN TO ASSURE PROPER DRAINAGE.

P23 UPON SUBSTANTIAL COMPLETION OF THE PROJECT AND PRIOR TO PLUMBING CONTRACTOR'S REQUEST FOR FINAL INSPECTION, THE CONTRACTOR SHALL FURNISH TO THE GENERAL CONTRACTOR FOR REVIEW, ONE (1) SET OF OPERATION AND MAINTENANCE MANUALS, IN A 3-RING HARD-BACK BINDER AND ELECTRONICALLY, ON TWO (2) THUMB DRIVE MEMORY USB STICKS. O&M MANUALS SHALL MINIMALLY INCLUDE THE FOLLOWING:

a. STARTUP AND SHUTDOWN PROCEDURES FOR EACH MAJOR PIECE OF EQUIPMENT.
b. OPERATING INSTRUCTIONS OUTLINING THE SAFE AND EFFICIENT OPERATION OF EACH MAJOR PIECE OF EQUIPMENT.
c. EQUIPMENT LIST OF EACH MAJOR PIECE OF EQUIPMENT INCLUDING THE MAKE, MODEL, SERIAL NUMBER (IF APPLICABLE), VOLTAGE, PHASE, # WIRES, AMPACITY AND ALL OTHER INDUSTRY STANDARD NAMEPLATE DATA.
d. SERVICE INSTRUCTIONS OUTLINING THE RECOMMENDED SPARE PARTS, ALONG WITH THE CONTACT INFORMATION FOR THE LOCAL SUPPLIER AND/OR FACTORY REPRESENTATIVE(S), AND THE RECOMMENDED FREQUENCY OF SERVICE OF EACH MAJOR PIECE OF EQUIPMENT.
e. COPIES OF REVIEWED/APPROVED SHOP DRAWINGS/SUBMITTALS.
f. AS-BUILT/RECORD DRAWINGS AND DOCUMENTATION.
g. GUARANTEES/WARRANTIES.
h. INSPECTION CARDS AND APPROVALS.
i. NAME OF OWNER, ARCHITECT, ENGINEER OF RECORD, CONTRACTOR AND ALL SUB-CONTRACTORS.

P24 AFTER SUBSTANTIAL COMPLETION OF ALL WORK AND ACCEPTANCE BY OWNER, THE PLUMBING CONTRACTOR SHALL FURNISH THE SERVICES OF AUTHORIZED REPRESENTATIVES OF THE EQUIPMENT MANUFACTURERS WHO SHALL INSTRUCT AND TRAIN THE OWNER'S PERSONNEL IN THE OPERATION AND CONTROL OF ALL EQUIPMENT. TRAINING TIME SHALL BE SUFFICIENT AND TO A LEVEL ACCEPTABLE (INDICATED IN WRITING) TO RESPECTIVE OWNER PERSONNEL BEING TRAINED ON EACH SYSTEM. TRAINING SHALL MINIMALLY INCLUDE THE FOLLOWING SYSTEMS:

a. PLUMBING HOT WATER SYSTEM.
b. GREASE WASTE SYSTEM.

P25 ALL PLUMBING PIPING SHALL BE SUPPORTED IN ACCORDANCE WITH SECTION 308 OF IPC. AS WELL AS INSTALLED FOR SEISMIC FORCES IN ACCORDANCE WITH 2015 IBC. SPACING REQUIREMENTS INCLUDE, BUT NOT LIMITED TO:

a. COPPER PIPE 1-1/4" AND SMALLER: 6' HORIZONTAL, 10' VERTICAL
b. COPPER PIPE 1-1/2" AND LARGER: 10' HORIZONTAL, 10' VERTICAL
c. CAST IRON PIPE: 5' HORIZONTAL, 15' VERTICAL
d. PVC PIPE: 4' HORIZONTAL, 10' VERTICAL

PLUMBING FIXTURES

WATER CLOSET - FLUSH VALVE - FLOOR MOUNT (WC-1)

WATER CLOSET - ADA - FLUSH VALVE - FLOOR MOUNT (WC-2)

AMERICAN STANDARD 2467.100; 1.1 GPF, WHITE VITREOUS CHINA WITH POLISHED CHROME TRIP LEVER. KOHLER K-4774-0 CLOSED FRONT SEAT AND COVER CHROME PLATED 3/8" SUPPLY PIPE TO WALL WITH CHROME PLATED ANGLE STOP VALVE, ESCUTCHEON AND FLEXIBLE RISER.

URINAL - ADA - WALL MOUNTED

KOHLER K-4960-ER BARDON URINAL WITH REAR SPUD; WASHOUT TOP SPUD URINAL WITH KOHLER K-13520 MANUAL 0.125 GPF WASHDOWN URINAL VALVE.

LAVATORY - DROP IN PORCELAIN SINK (L-1)

STANDARD #0476.028, AQUALYN 20" X 17" SELF-RIMMING VITREOUS CHINA COUNTERTOP LAVATORY WITH FRONT OVERFLOW AND FAUCET LEDGE FOR 4" CENTERS. DELTA #501-LF CENTER SET LAVATORY FAUCET, SINGLE HANDLE, 1.5 G.P.M. FLOW RESTRICTOR, AERATOR, GRID STRAINER AND 1-1/4" TAILPIECE, 17 GAUGE TUBULAR CHROME PLATEDP-TRAP WITH CLEANOUT AND WALL ESCUTCHEON.

LAVATORY - CONCRETE SINK (L-2)

TRUEFORM SKU: FLO-60V-ADA; 60" ADA FLOATING CONCRETE RAMP SINK. COORDINATE COLOR WITH ARCHITECTURAL. INSTALL WITH 2 TRUEFORM FLOATING SINK 'T' BRACKETS. REFER TO BRACKET MOUNTING INSTRUCTIONS SHEET FOR ADDITIONAL INFORMATION. FAUCET SHALL BE AMERICAN STANDARD 2275.503; TWO (2) FOR EACH CONCRETE SINK.

LAVATORY - MULTI-USER WASH SINK - FOOT PEDAL WALL MOUNTED FAUCETS (L-3)

COLUMBIA PRODUCTS SANI-LAV MODEL 56F1; THREE PERSON HANDS-FREE FLOOR MOUNTED WASH STATION.

EWC,1 ELECTRIC WATER COOLER - WALL HUNG (EWC-1)

OASIS #P8ACSL BARRIER-FREE SPLIT-LEVEL "VERSACOOLER LL" WITH STAINLESS STEEL TOP, LEAD FREE WATERWAY, RATED TO COOL 8.0 G.P.H. FROM 80° TO 50° WITH A 90° AMBIENT TEMPERATURE, STANDARD FINISH IN COLOR AS SELECTED BY ARCHITECT. EQUAL COOLERS AS MANUFACTURED BY HAWS, SUNROC, HALSEY TAYLOR OR ELKAY WILL BE ACCEPTABLE.

MOP SERVICE BASIN - 24" X 24" MOLDED STONE - FLOOR MOUNTED (MB-1)

SWAN MS-2424 STONE COMPOSITE MOP BASIN. DRAIN BODY SHALL BE INTEGRAL AND SHALL PROVIDE FOR A LEAD CAULK CONNECTION TO A 3" PIPE. PROVIDE AND INSTALL FIAT #E-77-AA VINYL BUMPERGUARDS ON ALL EXPOSED SIDES. ADJACENT TO WALLS SHALL BE CAULKED WITH DOW CORNING 780 WHITE SILICON SEALANT OR APPROVED EQUAL. SIZE: 24" X 24" X 10". AMERICAN STANDARD #8354.112 SERVICE SINK FAUCET, AQUASEAL RENEWABLE VALVES AND SEATS, VACUUM BREAKER, 3/4" HOSE OUTLET, BUCKET HOOK-STOPS IN SHANKS, TOP BRACE ALL CHROME PLATED.

1

EXTERIOR WALL HYDRANTS (WH-1; WH-2)

WALL HYDRANTS SHALL BE WOODFORD #67, 3/4" NON-FREEZE WALL HYDRANT WITH VANDAL PROOF INTEGRAL VACUUM BREAKER-BACKFLOW PREVENTER, STRAIGHT INLET CONNECTION, BRASS CASING AND WITH CHROME PLATED FINISH. VERIFY WALL THICKNESS ON THE ARCHITECTURAL DRAWINGS. SIMILAR HYDRANTS BY WADE, J.R. SMITH OR ZURN WILL BE ACCEPTABLE.
- WH-1 SUPPLY SHALL BE COLD WATER
- WH-2 SUPPLY SHALL BE HOT WATER

ROOF HYDRANT (RH-1)

WOODFORD MODEL RHY2-MS FREEZELESS ROOF HYDRANT. BACKFLOW PROTECTED WITH AN ASSE 1052 DOUBLE CHECK BACKFLOW PREVENTER THAT IS FIELD TESTABLE. 1" COLD WATER CONNECTION; AUTOMATIC DRAINING.

FIRE PROTECTION CRITERIA

FP1 BEFORE SUBMITTING A PROPOSAL, THIS CONTRACTOR SHALL VISIT THE SITE OF WORK AND FAMILIARIZE HIMSELF WITH SITE CONDITIONS. THIS CONTRACTOR SHALL CAREFULLY EXAMINE ALL CONSTRUCTION DOCUMENTS. SUBMISSION OF A BID WILL ACKNOWLEDGE THIS CONTRACTOR HAS EXAMINED ALL CONSTRUCTION DOCUMENTS. ALL ITEMS ON THE CONSTRUCTION DOCUMENTS AND INCLUDED IN ALL OTHER DIVISIONS OF THE PROJECT DRAWINGS, NORMALLY INSTALLED BY THIS CONTRACTOR, AND PROVIDED BY OTHERS SHALL BE INCLUDED. IT IS EXPRESSLY UNDERSTOOD THAT THIS PROPOSAL IS BASED ON THE ABOVE REQUIREMENTS AND THAT IT

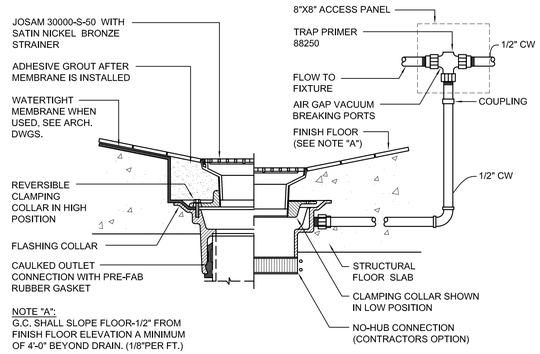

1 / P0.3 FLOOR DRAIN "FD-1" (FINISHED AREAS)
NO SCALE

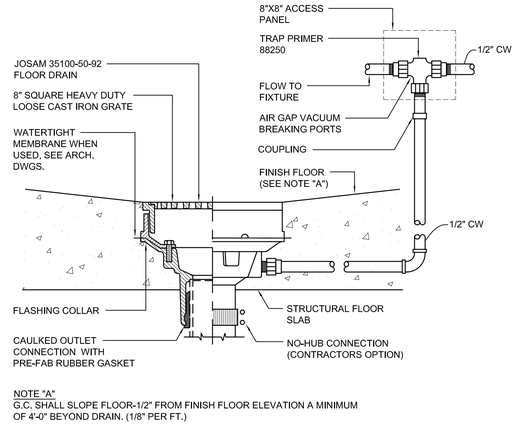

2 / P0.3 FLOOR DRAIN "FD-2" (UNFINISHED AREAS)
NO SCALE

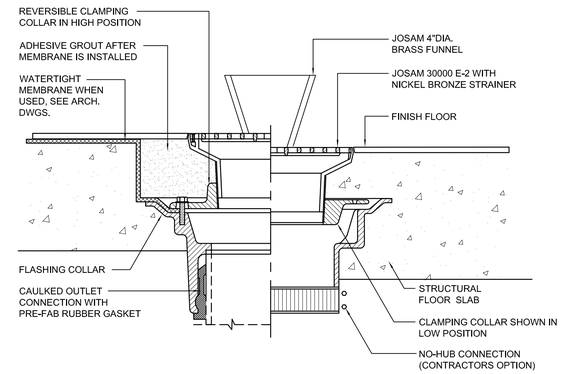

3 / P0.3 FUNNEL DRAIN "FD-3"
NO SCALE

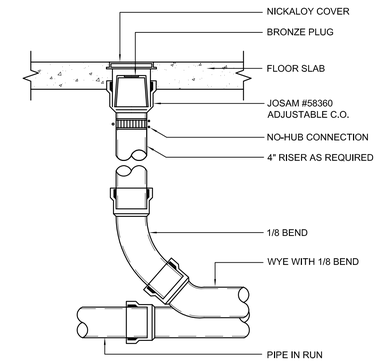

4 / P0.4 INTERIOR C.O. DETAIL "FCO"
NO SCALE

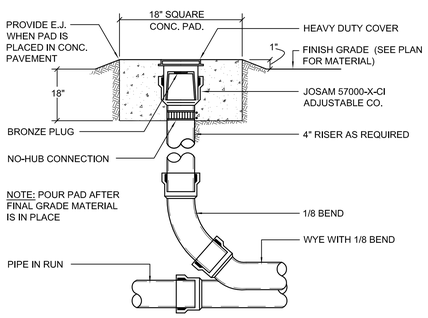

5 / P0.3 EXTERIOR C.O. DETAIL "GCO"
NO SCALE

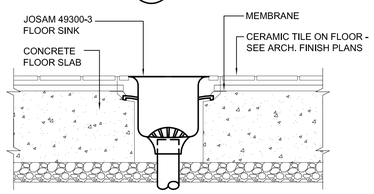

6 / P0.3 FLOOR SINK DETAIL
NO SCALE

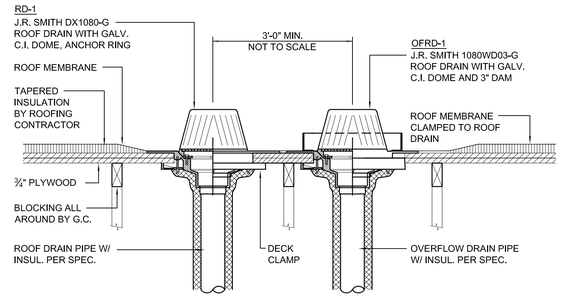

7 / P0.3 ROOF DRAIN DETAIL
NO SCALE

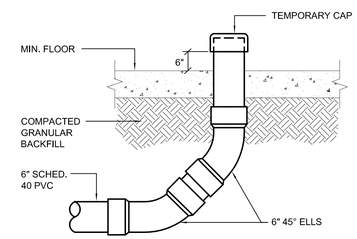

8 / P0.3 SODA LINE CONDUIT DETAIL
NO SCALE

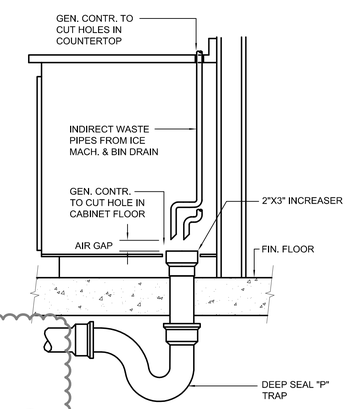

9 / P0.3 HUB DRAIN DETAIL "HD-1"
NO SCALE

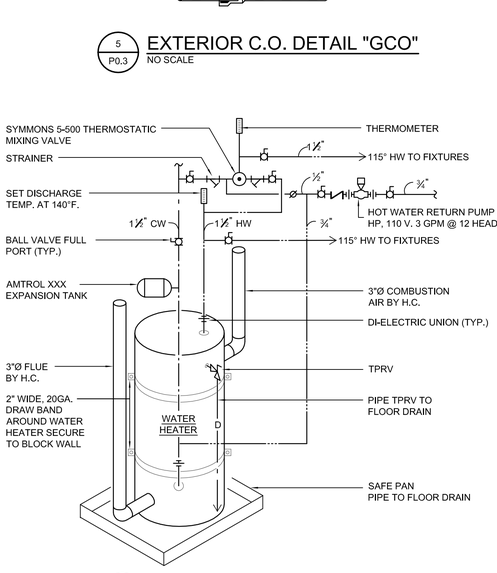

10 / P0.3 WATER HEATER DETAIL
NO SCALE

WATER HEATER SCHEDULE					
PLAN MARK	MANUFACTURER	MODEL	STORAGE (GAL.)	BTU INPUT	
GWH 1	A.O. SMITH	BTH-199	100	199,000	
NOTES:	ASHRAE/IES 90.1 B -1992, SEALED COMBUSTION, RECOVERY 173 G.P.H. @ 100 DEGREE TEMPERATURE RISE.				

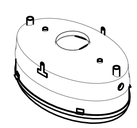

ISOMETRIC VIEW

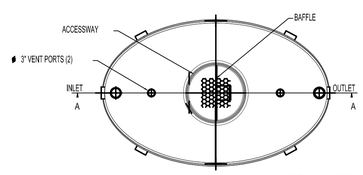

TOP VIEW

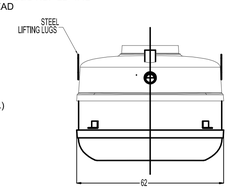

SIDE VIEW

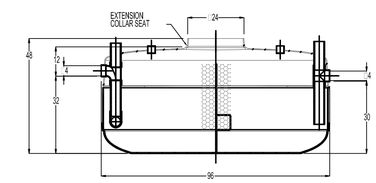

SECTION A-A

GMC 500

NOTES:
1. FOR GRAVITY APPLICATIONS ONLY.
2. ALL PROCEPTOR UNITS ARE MANUFACTURED WITH FIBERGLASS REINFORCED PLASTICS. PHYSICAL CHARACTERISTICS AND THICKNESS: POLYESTER RESIN AND E GLASS MINIMUM THICKNESS 1/4" WALL AND 3/8" TOP AND BOTTOM BOWLS.
3. ALL PROCEPTOR UNITS ARE TO BE INSTALLED IN ACCORDANCE WITH THE MANUFACTURERS INSTALLATION INSTRUCTION.
4. STANDARD PIPING IS SCH. 40 PVC.
5. GMC/OMC 500 - 3000 UNITS COME STANDARD WITH 4" INLET AND OUTLET (OTHER PIPE SIZE OPTIONS AVAILABLE ON REQUEST).
6. EXTENSION COLLAR TO BE ORDERED TO MEET FINISHED GRADE, CUT ON SITE FOR FINAL ADJUSTMENT AND CAULKED WITH SIKAFLEX BY CONTRACTOR FOR WATERTIGHT SEAL.
7. COVERS AVAILABLE FOR H20 TRAFFIC LOADING, PEDESTRIAN LOADING OR ABOVE GROUND INSTALLATION.
8. CONSULT GREEN TURTLE FOR OTHER SIZES.
9. 30 YEAR WARRANTY AGAINST LEAKS, AND STRUCTURAL FAILURE. 10. U.S. PATENT #5,746,912; CDN PATENT #2,195,822

SPECIFICATIONS
PIPE SIZE: 4 INCH PVC SCH 40
INSTALLATION: BURIED
ACCESSWAY SIZE: 24" DIAMETER
TOTAL WET VOLUME: 500 GAL.
MAX. GREASE CAPACITY: 279 GAL.
MAX SOLIDS CAPACITY: 87 GAL.

11 / P0.3 500 GALLON GREASE INTERCEPTOR DETAIL
NO SCALE

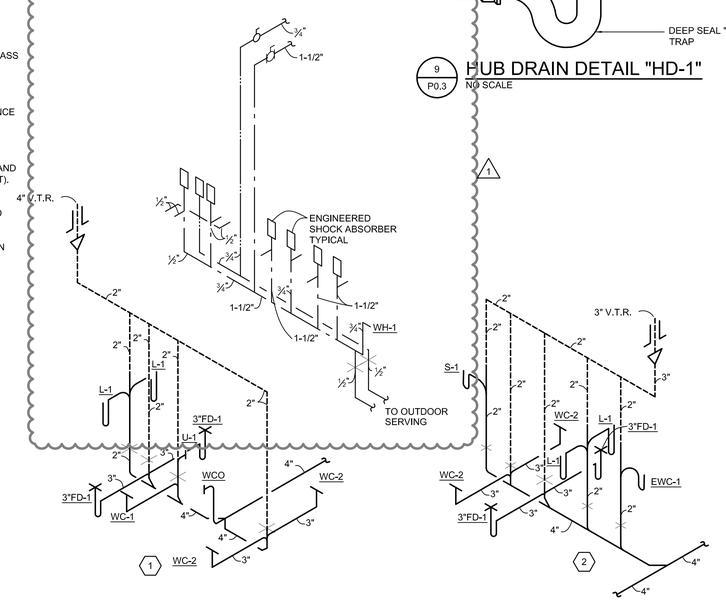

12 / P0.3 RESTROOM PLUMBING RISER
NO SCALE

COPYRIGHT © 2017 BAALMAN ARCHITECTS

BAALMAN ARCHITECTS
#2 Daniel Drive
O'Fallon, MO 63366
ph: 314.640.6212

Michael J. Baalman
ARCHITECT
License#: A-2012004035
Certificate of Authority: 2014003655

STRUCTURAL
AEDIFICA CASE ENGINEERING
796 MERUS COURT
ST. LOUIS, MO 63026
CONTACT: STEVE SACCO, P.E.
PHONE: 636-349-1600
FAX: 636-349-1730

M.E.P.
G&W ENGINEERING INC.
138 WELDON PKWY
MARYLAND HEIGHTS, MO 63043
CONTACT: KEVIN GRIESEMER
PHONE: 314-469-3737

New Restaurant, Banquet Center
& Corporate Offices at The Junction for:
Sugarfire Smokehouse
600 West Main
Wentzville, Missouri 63385

DATE	ISSUE	R#
06-15-18	PERMIT / BID SET	
06-26-18	ADDENDUM #1	

Expiration Date: Dec. 31, 2019

STATE OF MISSOURI
KEVIN S. GRIESEMER
NUMBER PE-23628
PROFESSIONAL ENGINEER
06-26-2018

Kevin S. Griesemer
ENGINEER

DRAWN BY: ASB, JD, DS

PROJECT NUMBER
16-076
DATE
June 15, 2018

SHEET
P0.3
PLUMBING DETAILS

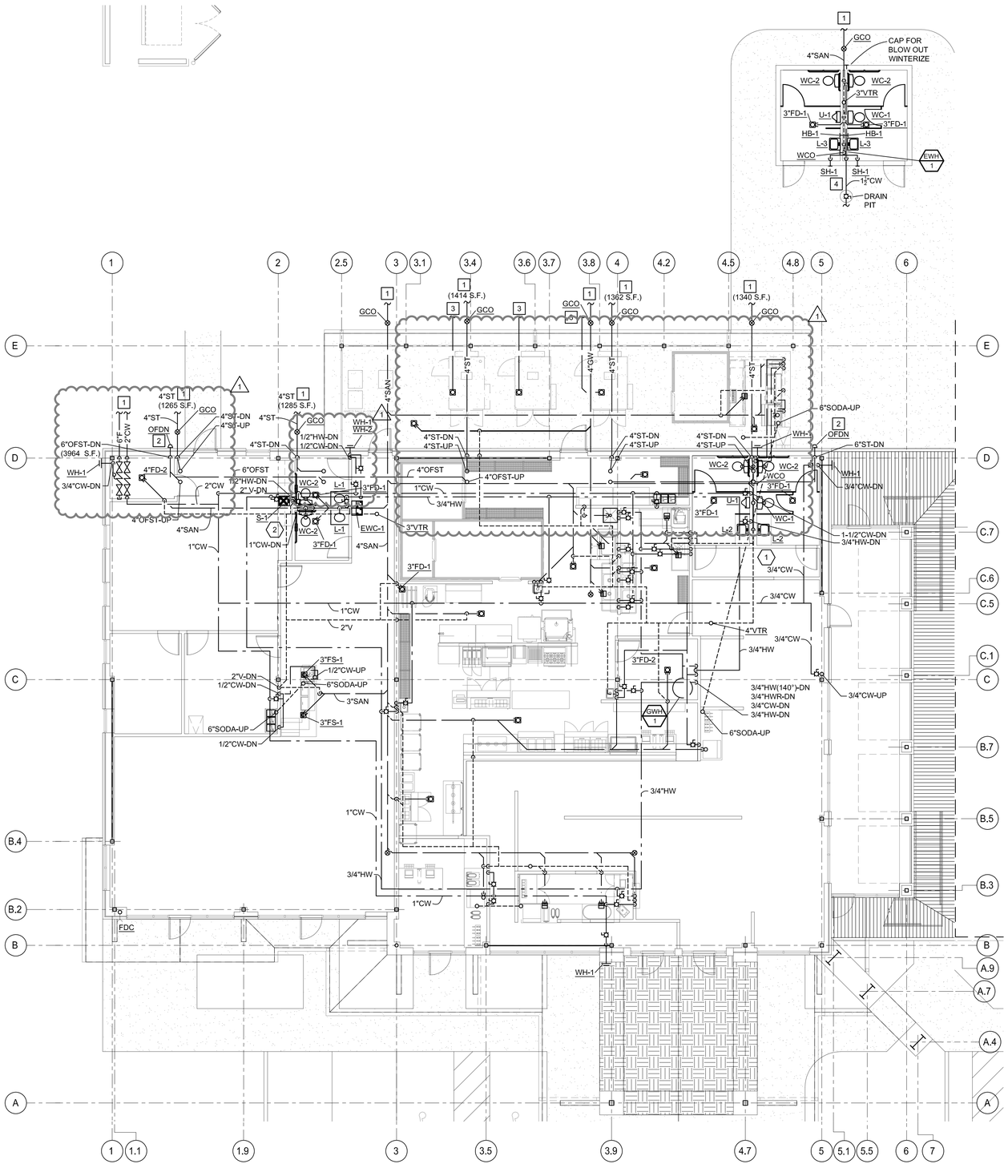

N FLOOR PLAN - PLUMBING
SCALE: 1/8" = 1'-0"

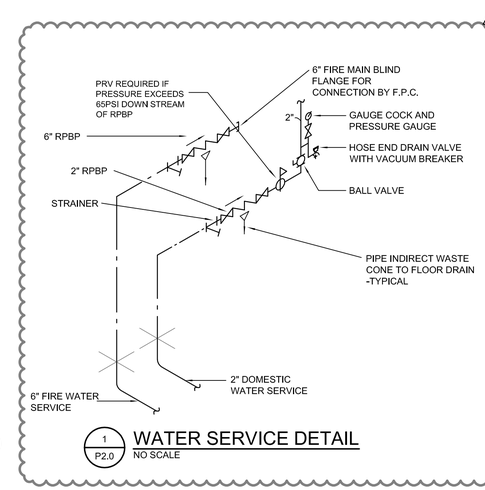

1 P2.0 WATER SERVICE DETAIL
NO SCALE

GENERAL NOTES - PLUMBING

A. COORDINATE ALL PLUMBING CONNECTIONS WITH DGG FOOD SERVICE DRAWINGS.

B. WATER CONNECTIONS TO COFFEE MAKERS; ICE MAKERS; CARBONATORS; ETC. SHALL ALL BE INSTALLED WITH AN APPROVED BACKFLOW DEVICE.

C. FOOD SERVICE DRAWINGS ARE HEREIN MADE PART OF THIS CONTRACTORS WORK. ALL PLUMBING WORK INDICATED BY FOOD SERVICE DRAWINGS SHALL BE PROVIDED IN THE CONTRACT. P.C. SHALL REVIEW AND REQUEST ANY CLARIFICATIONS PRIOR TO BID WHERE CONFLICTS MAY EXIST.

D. IT IS THE RESPONSIBILITY OF THE PLUMBING CONTRACTOR TO CORRECTLY LOCATE THE ROUGH-INS AS INDICATED ON THE FOOD SERVICE PLANS TO ENSURE THAT THEY ARE IN COMPLIANCE WITH ALL CODES.

E. PLUMBING CONTRACTOR IS RESPONSIBLE FOR PROVIDING ALL ROUGH-INS, INDIRECT CONNECTIONS, INTER-CONNECTIONS, AND FINAL CONNECTIONS TO MAKE THE FOOD SERVICE EQUIPMENT OPERATIONAL.

F. PLUMBING CONTRACTOR IS RESPONSIBLE FOR INSTALLING FAUCETS, TRAPS, AND SIMILAR ITEMS REQUIRED TO MAKE THE FOOD SERVICE EQUIPMENT OPERATIONAL.

G. PLUMBING CONTRACTOR SHALL PROVIDE AND INSTALL ALL TRAPS, SHOCK ABSORBERS, BACKFLOW PREVENTION DEVICES, FLOOR SINKS, HUB DRAINS, PRESSURE REDUCING VALVES, TRIM PIECES AND OTHER SIMILAR ITEMS WHICH MAY BE REQUIRED TO MAKE FOOD SERVICE EQUIPMENT OPERATIONAL.

H. THE PITCH OF THE FLOOR FOR ADDITIONAL DRAINS NOT RELATED TO THE FOOD SERVICE EQUIPMENT, SHALL BE PROVIDED BY THE GENERAL CONTRACTOR. SET TOP OF DRAIN 1/2" BELOW FINISH FLOOR.

I. ALL COPPER LINES SHALL BE SLEEVED OR INSULATED AT FLOOR PENETRATIONS OR WHERE CONTACT WITH DISSIMILAR METAL OR CONCRETE OCCURS.

J. THE WATER DISTRIBUTION SYSTEM SHALL BE PROTECTED AGAINST BACKFLOW EITHER BY INSURING "MINIMUM REQUIRED AIR GAP" AS PER APPLICABLE CODE IS MAINTAINED, OR BY INSTALLING A CODE APPROVED ACCESSIBLE "BACKFLOW PREVENTER" AT THE WATER OUTLET.

PLAN NOTES - PLUMBING

1. EXTEND FIRE AND DOMESTIC WATER TO SITE UTILITIES. COORDINATE WITH CIVIL.
2. OVERFLOW DOWNSPOUT NOZZLE ZURN Z-199. INSTALL 18" ABOVE GRADE.
3. EXTEND 4" SANITARY PIPING FROM AREA DRAIN TO 1,000 GALLON UNDERGROUND STORAGE TANK.
4. WATER PIPING SHALL BE INSTALLED AS TO BE DRAINED IN THE WINTER.

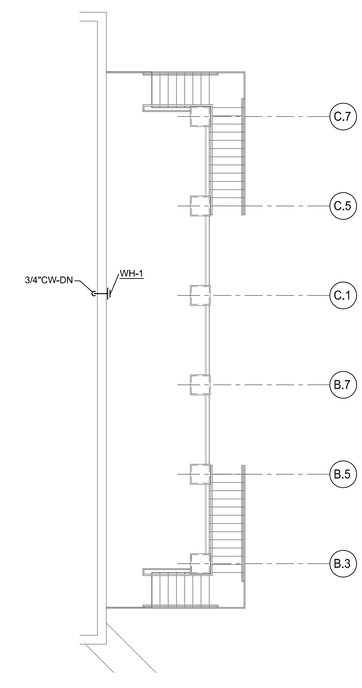

N TERRACE PLAN - PLUMBING
SCALE: 1/8" = 1'-0"

COPYRIGHT © 2017 BAALMAN ARCHITECTS

BAALMAN ARCHITECTS
#2 Daniel Drive
O'Fallon, MO 63366
ph: 314.640.6212

Michael J. Baalman
ARCHITECT
License#: A-2012004035
Certificate of Authority: 2014003655

STRUCTURAL
AEDIFICA CASE ENGINEERING
796 MERUS COURT
ST. LOUIS, MO 63026
CONTACT: STEVE SACCO, P.E.
PHONE: 636-349-1600
FAX: 636-349-1730

M.E.P.
G&W ENGINEERING INC.
138 WELDON PKWY
MARYLAND HEIGHTS, MO 63043
CONTACT: KEVIN GRIESEMER
PHONE: 314-469-3737

New Restaurant, Banquet Center & Corporate Offices at The Junction for:
Sugarfire Smokehouse
600 West Main
Wentzville, Missouri 63385

DATE	ISSUE	R#
06-15-18	PERMIT / BID SET	
06-26-18	ADDENDUM #1	

Expiration Date: Dec. 31, 2019

STATE OF MISSOURI
KEVIN S. GRIESEMER
NUMBER PE-23628
PROFESSIONAL ENGINEER
06-26-2018

Kevin S. Griesemer
ENGINEER

DRAWN BY: ASB, JD, DS

PROJECT NUMBER
16-076
DATE
June 15, 2018

SHEET
P2.0
FLOOR PLAN - PLUMBING

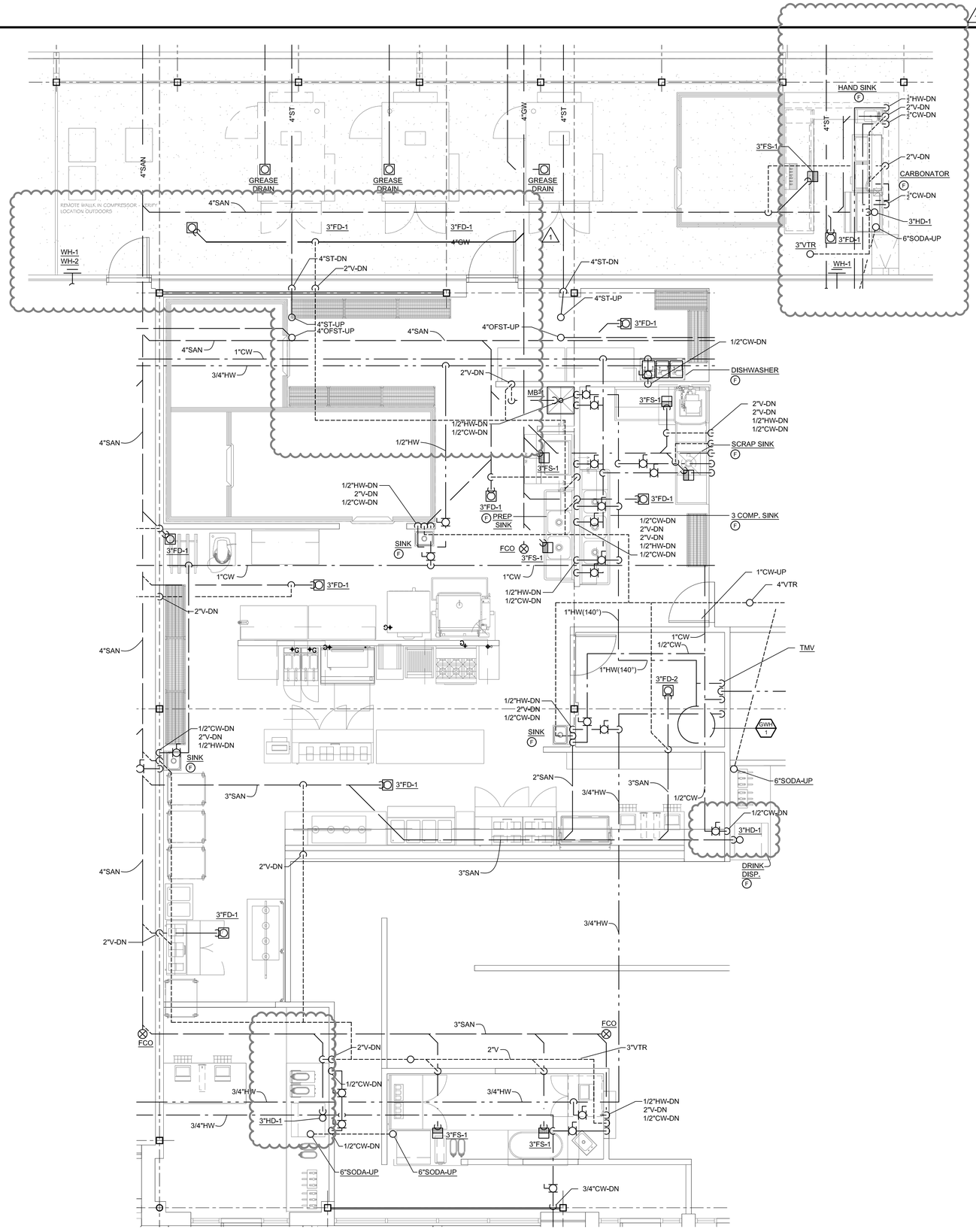

GENERAL NOTES - PLUMBING

A. COORDINATE ALL PLUMBING CONNECTIONS WITH DGG FOOD SERVICE DRAWINGS.

B. WATER CONNECTIONS TO COFFEE MAKERS; ICE MAKERS; CARBONATORS; ETC. SHALL ALL BE INSTALLED WITH AN APPROVED BACKFLOW DEVICE.

C. FOOD SERVICE DRAWINGS ARE HEREIN MADE PART OF THIS CONTRACTORS WORK. ALL PLUMBING WORK INDICATED BY FOOD SERVICE DRAWINGS SHALL BE PROVIDED IN THE CONTRACT. P.C. SHALL REVIEW AND REQUEST ANY CLARIFICATIONS PRIOR TO BID WHERE CONFLICTS MAY EXIST.

D. IT IS THE RESPONSIBILITY OF THE PLUMBING CONTRACTOR TO CORRECTLY LOCATE THE ROUGH-INS AS INDICATED ON THE FOOD SERVICE PLANS TO ENSURE THAT THEY ARE IN COMPLIANCE WITH ALL CODES.

E. PLUMBING CONTRACTOR IS RESPONSIBLE FOR PROVIDING ALL ROUGH-INS, INDIRECT CONNECTIONS, INTER-CONNECTIONS, AND FINAL CONNECTIONS TO MAKE THE FOOD SERVICE EQUIPMENT OPERATIONAL.

F. PLUMBING CONTRACTOR IS RESPONSIBLE FOR INSTALLING FAUCETS, TRAPS, AND SIMILAR ITEMS REQUIRED TO MAKE THE FOOD SERVICE EQUIPMENT OPERATIONAL.

G. PLUMBING CONTRACTOR SHALL PROVIDE AND INSTALL ALL TRAPS, SHOCK ABSORBERS, BACKFLOW PREVENTION DEVICES, FLOOR SINKS, HUB DRAINS, PRESSURE REDUCING VALVES, TRIM PIECES AND OTHER SIMILAR ITEMS WHICH MAY BE REQUIRED TO MAKE FOOD SERVICE EQUIPMENT OPERATIONAL.

H. THE PITCH OF THE FLOOR FOR ADDITIONAL DRAINS NOT RELATED TO THE FOOD SERVICE EQUIPMENT, SHALL BE PROVIDED BY THE GENERAL CONTRACTOR. SET TOP OF DRAIN 1/2" BELOW FINISH FLOOR.

I. ALL COPPER LINES SHALL BE SLEEVED OR INSULATED AT FLOOR PENETRATIONS OR WHERE CONTACT WITH DISSIMILAR METAL OR CONCRETE OCCURS.

J. THE WATER DISTRIBUTION SYSTEM SHALL BE PROTECTED AGAINST BACKFLOW EITHER BY INSURING "MINIMUM REQUIRED AIR GAP" AS PER APPLICABLE CODE IS MAINTAINED, OR BY INSTALLING A CODE APPROVED ACCESSIBLE "BACKFLOW PREVENTER" AT THE WATER OUTLET.

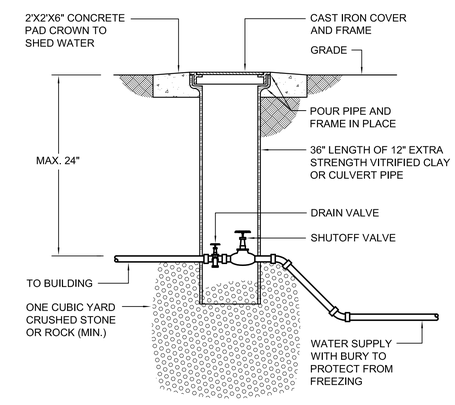

X / PX.X DRAIN PIT
NO SCALE

N
ENLARGED KITCHEN PLAN - PLUMBING
SCALE: 1/4" = 1'-0"

COPYRIGHT © 2017 BAALMAN ARCHITECTS

BAALMAN ARCHITECTS
#2 Daniel Drive
O'Fallon, MO 63366
ph: 314.640.6212

Michael J. Baalman
ARCHITECT
License#: A-2012004035
Certificate of Authority: 2014003655

STRUCTURAL
AEDIFICA CASE ENGINEERING
796 MERUS COURT
ST. LOUIS, MO 63026
CONTACT: STEVE SACCO, P.E.
PHONE: 636-349-1600
FAX: 636-349-1730

M.E.P.
G&W ENGINEERING INC.
138 WELDON PKWY
MARYLAND HEIGHTS, MO 63043
CONTACT: KEVIN GRIESEMER
PHONE: 314-469-3737

New Restaurant, Banquet Center & Corporate Offices at The Junction for:
Sugarfire Smokehouse
600 West Main
Wentzville, Missouri 63385

DATE	ISSUE	R#
06-15-18	PERMIT / BID SET	
06-26-18	ADDENDUM #1	

Expiration Date: Dec, 31, 2019

STATE OF MISSOURI
KEVIN S. GRIESEMER
NUMBER PE-23628
PROFESSIONAL ENGINEER
06-26-2018

Kevin S. Griesemer
ENGINEER

DRAWN BY: ASB, JD, DS

PROJECT NUMBER
16-076
DATE
June 15, 2018

SHEET
P2.1
KITCHEN PLAN - PLUMBING

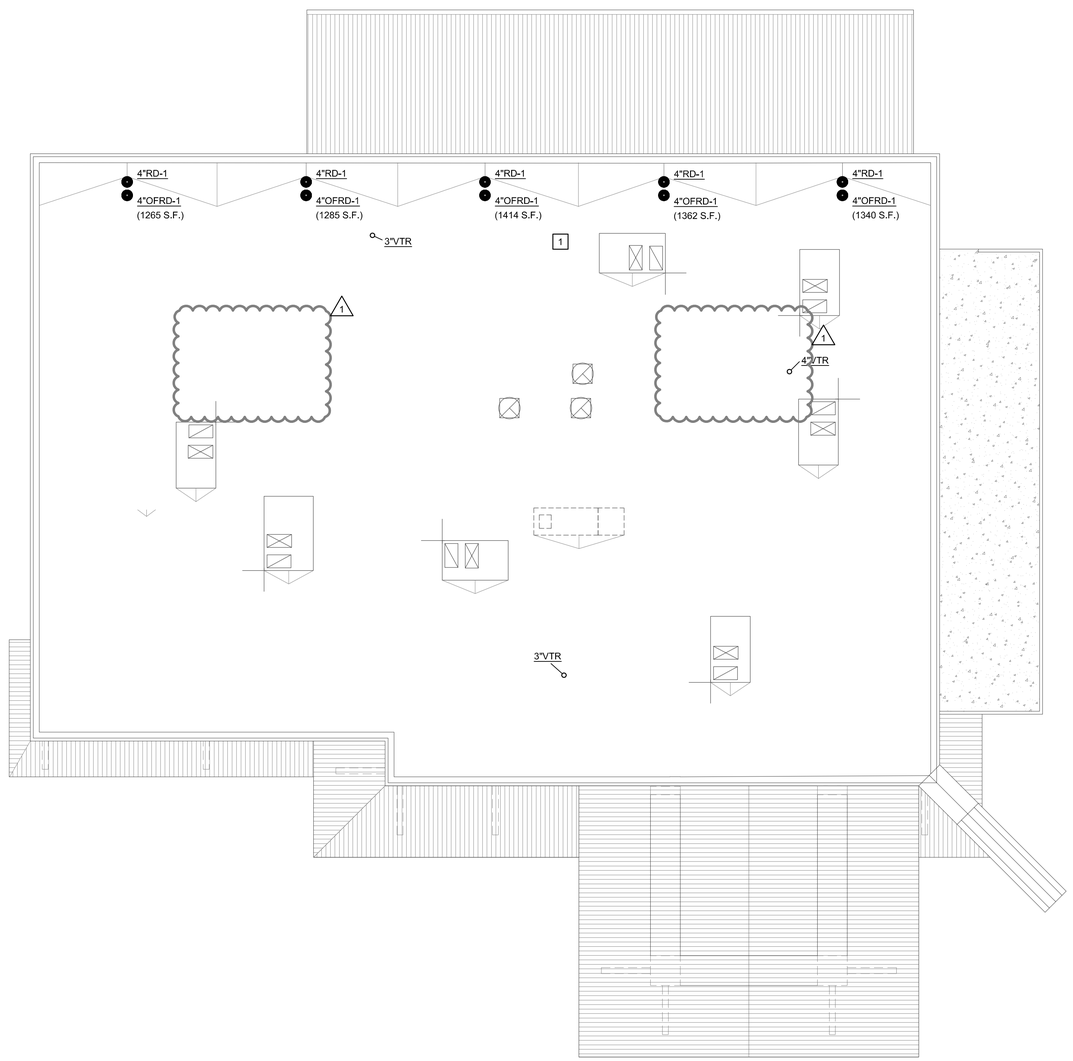

N

ROOF PLAN - PLUMBING

SCALE: 1/4" = 1'-0"

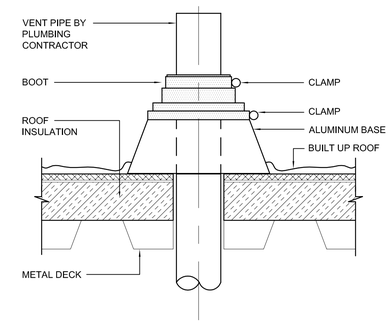

1 / P3.0 VENT THRU ROOF-DETAIL

NO SCALE

COPYRIGHT © 2017 BAALMAN ARCHITECTS

BAALMAN
ARCHITECTS

#2 Daniel Drive
O'Fallon, MO 63366
ph: 314.640.6212

Michael J. Baalman
ARCHITECT
License#: A-2012004035
Certificate of Authority:
2014003655

STRUCTURAL
AEDIFICA CASE ENGINEERING
796 MERUS COURT
ST. LOUIS, MO 63026
CONTACT: STEVE SACCO, P.E.
PHONE: 636-349-1600
FAX: 636-349-1730

M.E.P.
G&W ENGINEERING INC.
138 WELDON PKWY
MARYLAND HEIGHTS, MO 63043
CONTACT: KEVIN GRIESEMER
PHONE: 314-469-3737

New Restaurant, Banquet Center
& Corporate Offices at The Junction for:
Sugarfire Smokehouse
600 West Main
Wentzville, Missouri 63385

DATE	ISSUE	R#
06-15-18	PERMIT / BID SET	

Expiration Date: Dec. 31, 2019

STATE OF MISSOURI
KEVIN S. GRIESEMER
NUMBER
PE-23628
PROFESSIONAL ENGINEER

06-26-2018

Kevin S. Griesemer
ENGINEER

DRAWN BY: ASB, JD, DS

PROJECT NUMBER
16-076
DATE
June 15, 2018

SHEET
P3.0

ROOF PLAN - MECHANICAL

PANELBOARD SCHEDULE

DESIGNATION/I.D: LPK | TYPE OF PANEL: CIRCUIT BREAKER ** | MOUNTING: SURFACE
VOLTAGE: 120 / 208 /3PH-4W | BUS SIZE (AMPS): 600 | MAIN SWITCH: M.L.O. | MAIN RATING: SERIES
POLES: 3PSN | LUGS: STANDARD | TOTAL SPACE REQUIRED: 126 | NOTES:
FEEDER: SEE RISER DIAGRAM | POWER SOURCE:

CKT #	C/B	LOAD (WATTS) AØ	BØ	CØ	CLASS	LOAD DESCRIPTION	LOAD DESCRIPTION	CLASS	LOAD (WATTS) AØ	BØ	CØ	C/B	CKT #
1	20/1	1800			K	K-13 SMOKER	K-10C COMPRESSOR	K	504			20/3	2
3	20/1		1800		K	K-13 SMOKER	-	K		504		-	4
5	20/1			1800	K	K-13 SMOKER	-	K			504	-	6
7	20/1	1800			K	K-10B COOLER	K-15E COMPRESSOR	K	1188			20/3	8
9	20/1		1500		K	K-10A COOLER/ 64-POS	-	K		1188		-	10
11	20/1			540	K	K-7 CONV OUTLET	-	K			1188	-	12
13	20/1	1056			K	K-8 U.C. FRIDGE	K-15F COMPRESSOR	K	1104			20/3	14
15	20/1		1500		K	K-1 UNDERBAR LIGHTS	-	K		1104		-	16
17	20/1			1920	K	K-4 SODA GUN	-	K			1104	-	18
19	20/1	1056			K	K-5 BOTTLE BOX	K-19 CONV OUTLETS	K	360			20/1	20
21	20/1		1800		K	K-15A COOLER	K-19 CONV OUTLETS	K		540		20/1	22
23	20/1			696	K	K-15B,C EVAP COIL	K-18 CARBONATOR	K			1920	20/1	24
25	20/2	1383			K	K-15D FREEZER EVAP COIL	K-101 DISH MACHINE	K	1440			20/1	26
27	-		1383		K	-	K-103 GARBAGE DISP	K		792		20/3	28
29	20/1			1800	K	K-15A COOLER	-	K			792	-	30
31	20/1	1800			K	K-15A COOLER	-	K	792			-	32
33	20/1		600		K	K-35 BRAISING PAN	K-24 ICE MACHINE	K		1144		20/2	34
35	-				K	SHUNT TRIP	-	K			1144	-	36
37	20/1	840			K	K-34 CONVECTION OVEN	K-38 HOOD LIGHTS	K	1600			20/1	38
39	-				K	SHUNT TRIP	K-40 HOOD	K		1600		30/1	40
41	20/1			1920	K	K-73 HOT LAMPS	GAS WATER HEATER				1200	20/1	42
43	20/1	540			K	K-19 CONV RECEPTS	K-51 HOOD	K	1600			20/1	44
45	20/1		360		K	K-19 CONV RECEPTS	K-57 TABLE W/OUTLETS	K		1600		20/1	46
47	20/1			360	K	K-19 CONV RECEPTS	K-57 TABLE W/OUTLETS	K			1600	20/1	48
49	20/1	960			K	K-28 MIXER	K-54 TABLE W/OUTLETS	K	1600			20/1	50
51	20/1		816		K	K-49A LIFTS/CONTROLS	K-55 BUN TOASTER	K		1200		20/1	52
53	-					SHUNT TRIP	K-77 HOT HOLDING CABS	K			1728	20/1	54
55	20/1	180			K	K-44 CONV OUTLET	K-77 HOT HOLDING CABS	K	1728			20/1	56
57	-					SHUNT TRIP	K-77 HOT HOLDING CABS	K		1728		20/1	58
59	20/1			600	K	K-41 STOVE	K-77 HOT HOLDING CABS	K			1728	20/1	60
61	-					SHUNT TRIP	K-78 HOT FOOD WELL	K	1500			20/1	62
63	20/1		1920		K	K-73 HOT LAMPS	K-79 REFRIG TABLE	K		936		20/1	64
65	20/2			1498	K	K-70 HOT FOOD UNIT	K-59 CONV OUTLETS	K			540	20/1	66
67	-	1498			K	-	CONV OUTLETS - DINING	R	720			20/1	68
69	20/1		1056		K	K-68 REFRIG TABLE	K-18 CARBONATOR	K		1920		20/1	70
71	20/1			816	K	K-66 DROP IN REFRIG	K-85, K-87	K			696	20/1	72
73	20/1	1500			K	K-64A POS	K-89 WORKTOP FREEZER	K	732			20/1	74
75	20/1		1500		K	K-64A POS	K-90 SHAKE MIXES	K		1920		20/1	76
77	20/1			800	R	OUTDOOR FANS	K-90 SHAKE MIXES	K			1920	20/1	78
79	20/1	800			R	OUTDOOR FANS	K-64 POS	K	1500			20/1	80
81	20/1		1500		K	K-84 BEVERAGE	K-95, K-85	K		900		20/1	82
83	20/1			1500	K	K-84 BEVERAGE	K-83 CONV OUTLETS	K			540	20/1	84
SF	-					SECTION 3						-	SF
SF	-					-						-	SF
SF	-					-						-	SF
TOTALS		15213	15735	14250					16368	17076	16604	TOTALS	

CONNECTED LOAD: (VOLT-AMPERE) 95,246VA | NOTES: * PROVIDE LOCK ON DEVICE ** 10,000 A.I.C. RATING UNLESS OTHERWISE SPECIFIED | CALC. DEMAND LOAD AMPERE: 477A

CLASS: M1=SINGLE PH MOTOR, M3=3PH MOTOR, M2=2PH MOTOR, L=LIGHTING, R=RECEPTACLE, A1=1PH A/C LOAD, A2=2PH A/C LOAD, A3=3PH A/C LOAD, H=HEATING, K=KITCHEN; XF=TRANSFORMER-PANEL; SF=SUB-FEED

PANELBOARD SCHEDULE

DESIGNATION/I.D: LPK. | TYPE OF PANEL: CIRCUIT BREAKER ** | MOUNTING: SURFACE
VOLTAGE: 120 / 208 /3PH-4W | BUS SIZE (AMPS): 600 | MAIN SWITCH: M.L.O. | MAIN RATING: SERIES
POLES: 3PSN | LUGS: STANDARD | TOTAL SPACE REQUIRED: 126 | NOTES:
FEEDER: SEE RISER DIAGRAM | POWER SOURCE:

CKT #	C/B	LOAD (WATTS) AØ	BØ	CØ	CLASS	LOAD DESCRIPTION	LOAD DESCRIPTION	CLASS	LOAD (WATTS) AØ	BØ	CØ	C/B	CKT #
85	20/1	336			K	K-85 SODA	K-64 POS	K	1500			20/1	86
87	20/1		1920		K	K-18 CARBONATOR	K-64 POS	K		1500		20/1	88
89	20/1			1080	R	RECEPTS BATH/CONV	BAR FAN (OUTSIDE)	R			800	20/1	90
91	20/1	1080			R	RECEPTS DINING/OUTDOOR	RTU-3	A3	5028			50/3	92
93	20/1		540		R	RECEPTS OUTDOOR TERR.	-	A3		5028		-	94
95	50/3			5028	A3	RTU-5	-	A3			5028	-	96
97	-	5028			A3	-	RTU-4	A3	5028			50/3	98
99	-		5028		A3	-	-	A3		5028		-	100
101	50/3			3600	A3	RTU-6	-	A3			5028	-	102
103	-	3600			A3	-	MAU-1	A3	2592			35/3	104
105	-		3600		A3	-	-	A3		2592		-	106
107	50/3			5040	A3	RTU-7	-	A3			2592	-	108
109	-	5040			A3	-	KEF-1	M3	1800			20/3	110
111	-		5040		A3	-	-	M3		1800		-	112
113	20/3			1800	M3	KEF-3	-	M3			1800	-	114
115	-	1800			M3	-	KITCHEN LIGHTING	L	1066			20/1	116
117	-		1800		M3	-	DINING ROOM LIGHTING	L		1440		20/1	118
119	20/3			1800	M3	KEF-2	OUTSIDE/BAR DINING LTG	L			810	20/1	120
121	-	1800			M3	-	EWH-1	H	2000			30/2	122
123	-		1800		M3	-	-	H		2000		-	124
125	20/1					SPARE	SPARE					20/1	126
TOTALS		18684	19728	18348					19014	19388	16058	TOTALS	

CONNECTED LOAD: (VOLT-AMPERE) 111,220VA | NOTES: * PROVIDE LOCK ON DEVICE ** 10,000 A.I.C. RATING UNLESS OTHERWISE SPECIFIED | CALC. DEMAND LOAD AMPERE: 307A

CLASS: M1=SINGLE PH MOTOR, M3=3PH MOTOR, M2=2PH MOTOR, L=LIGHTING, R=RECEPTACLE, A1=1PH A/C LOAD, A2=2PH A/C LOAD, A3=3PH A/C LOAD, H=HEATING, K=KITCHEN; XF=TRANSFORMER-PANEL; SF=SUB-FEED

PANELBOARD SCHEDULE

DESIGNATION/I.D: LP1 | TYPE OF PANEL: CIRCUIT BREAKER ** | MOUNTING: SURFACE
VOLTAGE: 120 / 208 /3PH-4W | BUS SIZE (AMPS): 225 | MAIN SWITCH: M.L.O. | MAIN RATING: SERIES
POLES: 3PSN | LUGS: STANDARD | TOTAL SPACE REQUIRED: 60 | NOTES:
FEEDER: SEE RISER DIAGRAM | POWER SOURCE:

CKT #	C/B	LOAD (WATTS) AØ	BØ	CØ	CLASS	LOAD DESCRIPTION	LOAD DESCRIPTION	CLASS	LOAD (WATTS) AØ	BØ	CØ	C/B	CKT #
1	20/1	900			R	BANQUET RECEPTS	OUTDOOR BATH RECEPTS	R	540			20/1	2
3	20/1		1080		R	BANQUET/RR RECEPTS	RTU-1	A3		3264		40/3	4
5	20/1			600	R	ELEC WATER COOLER **	-	A3			3264	-	6
7	20/1	300			R	FACP *	-	A3	3264			-	8
9	20/1		720		R	OFFICE RECEPTS	RTU-2	A3		5532		60/3	10
11	20/1			900	R	OPEN OFFICE RECEPTS	-	A3			5532	-	12
13	20/1	540			R	STORAGE/OFFICE RECEPTS	-	A3	5532			-	14
15	20/1		720		R	OPEN OFFICE RECEPTS	LIGHTING CONTACTOR	L		200		20/1	16
17	20/1			1200	R	COPIER	EXTERIOR SIGNAGE	L			1600	20/1	18
19	20/1	1200			R	KITCHENETTE RECEPT	EXTERIOR SIGNAGE	L	1600			20/1	20
21	20/1		500		R	KITCHENETTE RECEPT	BANQUET LIGHTING	L		1470		20/1	22
23	20/1			1200	R	KITCHENETTE RECEPT	EXTERIOR BLDG LTG	L			1200	20/1	24
25	20/1	360			R	TELEPHONE BOARD	SITE LIGHTING	L	805			20/1	26
27	20/1		540		R	CONV /OUTDOOR RECEPTS	VBALL COURT LIGHTING	L		1464		20/1	28
29	30/2			2000	H	EWH-A	SITE LIGHTING	L				20/1	30
31	-	2000			H	-	EWH-A	H	2000			30/2	32
33	30/2		2000		H	EWH-A	-	H		2000		-	34
35	-			2000	H	-	CARBONATOR	K			1500	20/1	36
37	30/2	1250			H	EWH-1	CARBONATOR	K	1500			20/1	38
39	-		1250		H	-	SODA GUN	K		1500		20/1	40
41	20/1					SPARE	BOTTLE BOX / ICE & SODA	K			1200	20/1	42
43	20/1	600			L	FLAG POLE LIGHTING	HAND DRYER	R	1200			20/1	44
45	20/1		1500		L	BUILDING SIGNAGE	HAND DRYER	R		1200		20/1	46
47	20/1			1500	L	BUILDING SIGNAGE	HAND DRYER	R			1200	20/1	48
49	20/1	300			L	IRRIGATION PANEL	HAND DRYER	R	1200			20/1	50
51	20/1		1200		R	HAND DRYER	SPARE					20/1	52
53	20/1			1200	R	HAND DRYER	SPARE					20/1	54
55	20/1					SPARE	SPARE					20/1	56
57	20/1					SPARE	SPARE					20/1	58
59	20/1					SPARE	SPARE					20/1	60
TOTALS		7450	9510	10600					17641	16630	15496	TOTALS	

CONNECTED LOAD: (VOLT-AMPERE) 77,327VA | NOTES: * PROVIDE LOCK ON DEVICE ** GFCI BREAKER | CALC. DEMAND LOAD AMPERE: 179A

LIGHT FIXTURE SCHEDULE

PLAN MARK	MOUNTING	MANUFACTURER	MODEL NUMBER	LUMEN	LAMP	VOLTAGE	INPUT WATTS	FINISH	NOTES
C	C/R	WILLIAMS	LC6-L15C-835-XXX-CS-W-XXX-XXX	1085	LED	120	19		
CNPY	C/R	CREE	LR6-10L-40K-120V-A-DR-US	1000	LED	120	12		
FL	W/S	MAXLINTE IN C	FLS 40 U 50B	-	LED	120	37		
FLD	W/S	MAXLITE	BR30AUD2E0B	3121	LED	120	28		
G	C/R	COLUMBIA	CFP24-5540	5600	LED	120	50		
G2	C/R	COLUMBIA	CFP24-4140	4123	LED	120	40		
GN	W/S	ARK LIGHTING	AS16-1-AGB102-1-ACN004-1	800	LED	120	11		
P	C/P	BOCK LIGHTING	SN512GV/LE D850	797	LED	120	10		BOTTOM OF FIXTURE AT 8-6" AFF
P3	C/P	HATCO	DL-1400	797	LED	120	10		BOTTOM OF FIXTURE AT 7'-0" AFF
PT	W/S	RAB LIGHTING	ALED5T26N/480 (TYPE V SHORT SEMICUTOFF)	553	LED	120	27		
R	C/R	INTENSE LIGHTING	SS6G3DRL1358	1009	LED	120	13		
S	C/R	COLUMBIA LIGHTING	CFP24-5540	5600	LED	120	50		
STP	W/R	GM LIGHTING	STLS-ST-B	75	LED	120	2		
ST	C/P	COLUMBIA LIGHTING	CSL4-4040	4485	LED	120	40		
T	C/TK	JUNO LIGHTING	R600L-35K-80CRI-FL	821	LED	120	10		BOTTOM OF FIXTURE AT 11'-6" AFF
VN	W/S	INNOVATION	208-SN-M2	490	LED	120	16		
SA	POLE	HUBBELL	ASL-16L-5K-210-4	13000	LED	120	115		20'-0" POLE
SB	POLE	HUBBELL	ASL-16L-5K-210-5	13000	LED	120	230		20'-0" POLE
SC	POLE	HUBBELL	ASL-8L-5K-210-3	6100	LED	120	62		20'-0" POLE
SD	POLE	NATIONAL LIGHTING SOLUTIONS	VUE-3-TT-112L-1050-5500K	37500	LED	120	366		20'-0" POLE
EM	W/S	COMPASS	CC SERIES, CU2, CIR, COR	-	LED	120	3		MOUNT AT 8'-0" AFF
XC	UNIV	COMPASS	CC SERIES, CU2, CIR, COR	-	LED	120	5		

NOTES:

ORDERING INFORMATION: ALL LIGHTING FIXTURES WILL BE OWNER FURNISHED, CONTRACTOR INSTALLED. COORDINATE WITH G.C. FOR SCHEDULING AND FINAL FIXTURE SELECTIONS/PACKAGE.

ALL FIXTURES AND COMPONENTS SHALL BE PROVIDED WITH STANDARD MANUFACTURER'S WARRANTY OR 2-YEAR WARRANTY, WHICHEVER IS LONGER. PROVIDE WARRANTY CERTIFICATE WITH SUBMITTALS.

1. PROVIDE CURRENT LIMITER ON TRACK (TYPE T) TO 100W.

ABBREVIATIONS:

C/AC CEILING AIR-CRAFT CABLE, C/CV CEILING COVE, C/P CEILING PENDANT, C/R CEILING RECESSED, C/S CEILING SURFACE, C/SP CEILING SUSPENDED, C/TK TRACK MOUNTED, F/S FLOOR SURFACE, G/P GRADE PAD, G/PL GRADE POLE, R/S ROOF SURFACE, TBD TO BE DETERMINED, U/C UNDER COUNTER, UNIV. UNIVERSAL, W/R WALL RECESSED, W/S WALL SURFACE

ELECTRIC HEATING EQUIPMENT SCHEDULE

PLAN MARK	MFR.	MODEL NO.	INPUT (KW)	OUTPUT (MBH)	CFM	HP	RPM	VOLTS/ PH.	AMPS	NOTES
EWH-A	Q-MARK	AWH 4408F	4.0	13.6	100	1/50	1550	208/1	19.2	1,2

NOTES:

1. FURNISH AND INSTALL UNIT WITH INTEGRAL THERMOSTAT, DISCONNECT SWITCH, AND RECESSED MOUNTING FRAME.
2. PROVIDE HEATER SUBMITTALS FOR APPROVAL PRIOR TO ORDERING.

COPYRIGHT © 2017 BAALMAN ARCHITECTS

BAALMAN ARCHITECTS
#2 Daniel Drive
O'Fallon, MO 63366
ph: 314.640.6212

Michael J. Baalman
ARCHITECT
License#: A-2012004035
Certificate of Authority: 2014003655

STRUCTURAL
AEDIFICA CASE ENGINEERING
796 MERUS COURT
ST. LOUIS, MO 63026
CONTACT: STEVE SACCO, P.E.
PHONE: 636-349-1600
FAX: 636-349-1730

M.E.P.
G&W ENGINEERING INC.
138 WELDON PKWY
MARYLAND HEIGHTS, MO 63043
CONTACT: KEVIN GRIESEMER
PHONE: 314-469-3737

New Restaurant, Banquet Center
& Corporate Offices at The Junction for:
Sugarfire Smokehouse
600 West Main
Wentzville, Missouri 63385

R#	ISSUE	DATE
	PERMIT / BID SET	06-15-18
	ADDENDUM #1	06-26-18

Expiration Date: Dec. 31, 2019

STATE OF MISSOURI — KEVIN S. GRIESEMER — NUMBER PE-23628 — PROFESSIONAL ENGINEER

06-26-2018

Kevin S. Griesemer
ENGINEER

DRAWN BY: ASB, JD, DS

PROJECT NUMBER
16-076
DATE
June 15, 2018

SHEET
E0.3
ELECTRICAL SCHEDULES

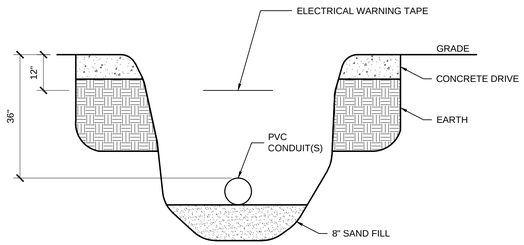

2 / E1.0 UNDERGROUND CONDUIT BURIAL DETAIL
NO SCALE

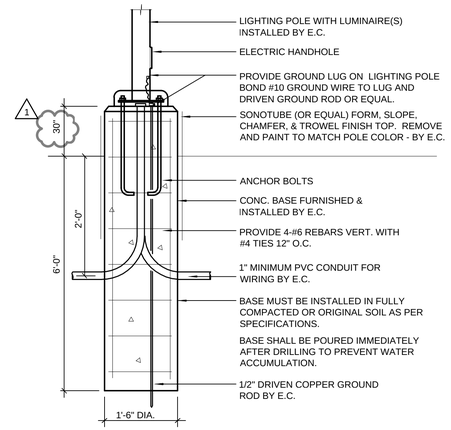

1 / E1.0 LIGHT STANDARD DETAIL
NO SCALE

PLAN NOTES - ELECTRICAL

1. ROUTE CIRCUIT VIA TIMECLOCK / LIGHTING CONTACTOR. SEE POWER AND LIGHTING PLANS.
2. LIGHT FIXTURES FOR FLAG POLE LIGHTING. COORDINATE WITH OWNER FOR FINAL SELECTION. ROUTE CIRCUIT THROUGH LIGHTING CONTACTOR / PHOTOCELL FOR DUSK-TO-DAWN CONTROL. MOUNT PER DETAIL 6/E0.2.
3. PROVIDE (1) 2" C FOR CHARTER SERVICE TO BUILDING. STUB FROM ELECTRICAL UTILITY TRENCH, AND THEN TURN UP INTO THE BUILDING.
4. PROVIDE (1) 4" CONDUIT, 36" BELOW GRADE, FOR PRIMARY ELECTRICAL FROM EXISTING HOTEL TRANSFORMER TO NEW SUGARFIRE PAD MOUNT TRANSFORMER. AT SUGARFIRE TRANSFORMER, TURN OUT (1) 4" TO NORTHWEST FOR FUTURE LOOP EXTENSION.
5. PROVIDE SECONDARY FEEDER IN PVC SCH 40 CONDUIT, 36" BELOW GRADE. SEE RISER DIAGRAM FOR SIZE.
6. TRANSFORMER PROVIDED BY UTILITY CO. CONCRETE PAD OR BASE SHALL BE PROVIDED BY THE ELECTRICAL CONTRACTOR PER CONSTRUCTION STANDARDS OF THE UTILITY CO.
7. PROVIDE (2) 2" CONDUIT FOR TELECOM UTILITY SERVICE, 24" BELOW GRADE WITH SCH 40 PVC. EXTEND TO PROPERTY LINE. TURN UP INSIDE UTILITY SERVICE ROOM.
8. ELECTRIC METER BASE AND/OR CURRENT TRANSFORMER CABINET TO BE PROVIDED BY THE ELECTRICAL CONTRACTOR PER STANDARDS OF THE ELECTRIC UTILITY CO. PROVIDE ALL COSTS FOR A COMPLETE INSTALLATION INCLUDING GROUNDING.
9. CONCRETE LIGHTING BASE PROVIDED BY ELECTRICAL CONTRACTOR. SEE DETAIL 1/E1.0. PROVIDE GROUND WIRE AND BONDING OF THE POLE TO MEET ALL REQUIREMENTS OF THE LOCAL AHJ. NO EXCEPTIONS.
10. PROVIDE (1) 2" CONDUIT FOR FUTURE MONUMENT SIGN. ROUTE INTO BUILDING ELECTRICAL ROOM. STUB UP AND LABEL AS "FUTURE". COORDINATE EXACT LOCATION IN ELECTRICAL ROOM WITH ALL TRADES. PROVIDE WEATHERPROOF QUAZITE 12"x12" JUNCTION BOX AT APPROXIMATE SIGN LOCATION.

GENERAL NOTES - ELECTRICAL

A. LOCATE ALL UNDERGROUND UTILITIES PRIOR TO STARTING ANY WORK ON THS SITE.

B. COORDINATE ALL ROUTING WITH CIVIL ENGINEERING PLANS. REFER TO CIVIL DRAWINGS FOR ALL SITE DATA PRIOR TO BID OR START OF CONSTRUCTION.

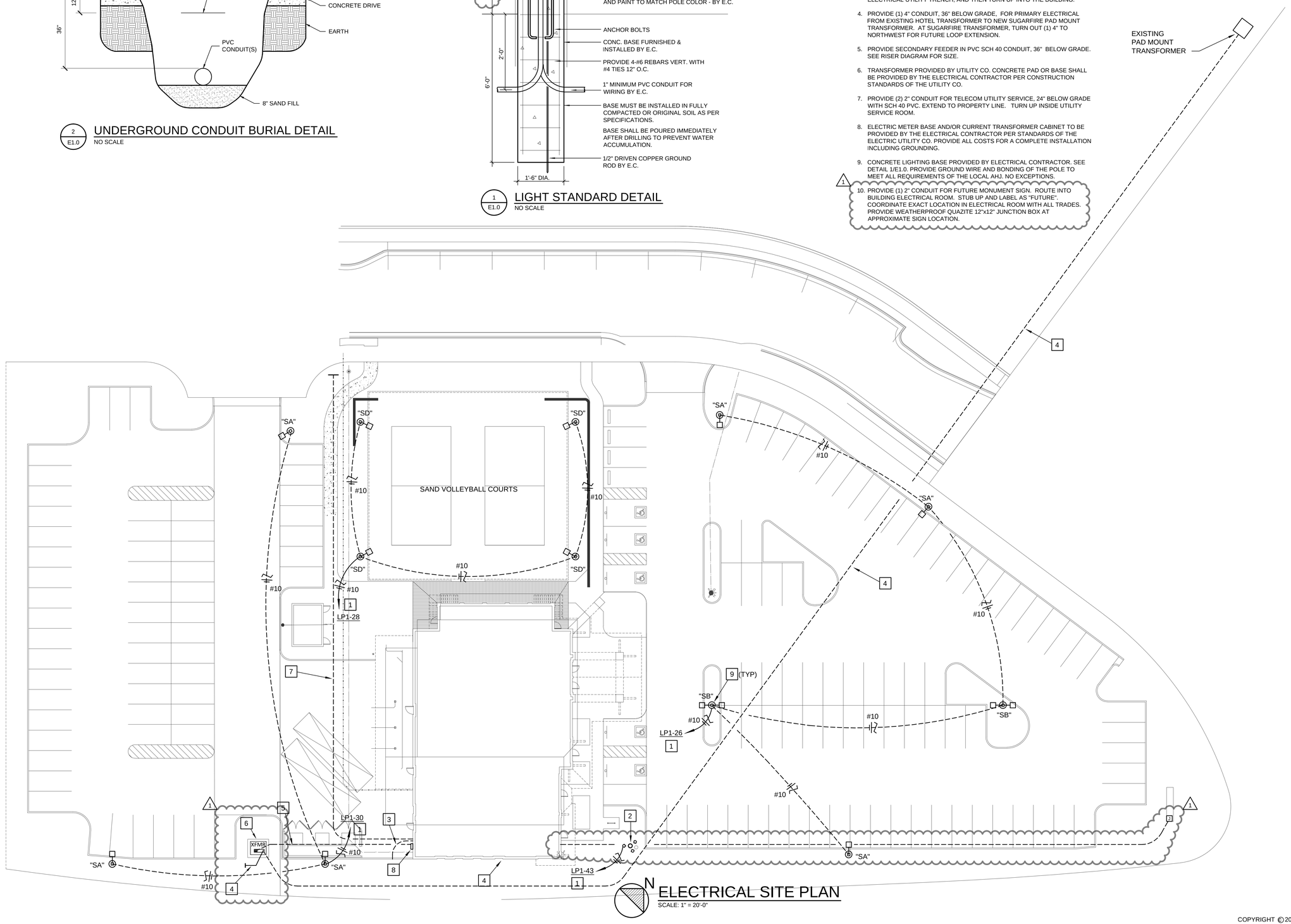

ELECTRICAL SITE PLAN
SCALE: 1" = 20'-0"

COPYRIGHT © 2017 BAALMAN ARCHITECTS

BAALMAN ARCHITECTS
#2 Daniel Drive
O'Fallon, MO 63366
ph: 314.640.6212

Michael J. Baalman
ARCHITECT
License#: A-2012004035
Certificate of Authority: 2014003655

STRUCTURAL
AEDIFICA CASE ENGINEERING
796 MERUS COURT
ST. LOUIS, MO 63026
CONTACT: STEVE SACCO, P.E.
PHONE: 636-349-1600
FAX: 636-349-1730

M.E.P.
G&W ENGINEERING INC.
138 WELDON PKWY
MARYLAND HEIGHTS, MO 63043
CONTACT: KEVIN GRIESEMER
PHONE: 314-469-3737

New Restaurant, Banquet Center
& Corporate Offices at The Junction for:
Sugarfire Smokehouse
600 West Main
Wentzville, Missouri 63385

DATE	ISSUE	R#
06-15-18	PERMIT / BID SET	
06-26-18	ADDENDUM #1	

Expiration Date: Dec. 31, 2019

STATE OF MISSOURI
KEVIN S. GRIESEMER
NUMBER PE-23628
PROFESSIONAL ENGINEER

06-26-2018

Kevin S. Griesemer
ENGINEER

DRAWN BY: ASB, JD, DS

PROJECT NUMBER
16-076
DATE
June 15, 2018

SHEET
E1.0

ELECTRICAL SITE PLAN

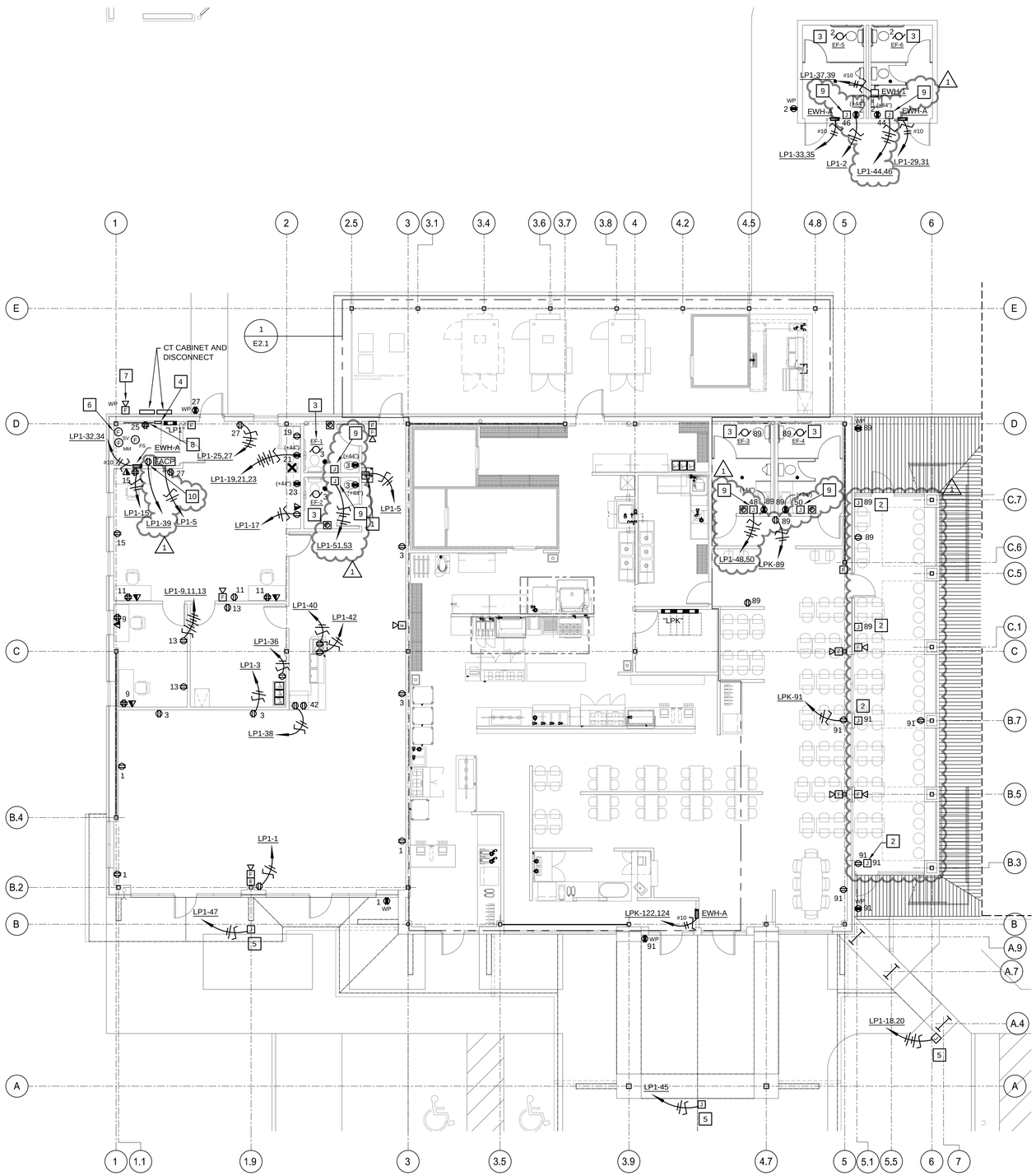

N FLOOR PLAN - POWER & SYSTEMS

SCALE: 1/8" = 1'-0"

PLAN NOTES - POWER & SYSTEMS

1. PROVIDE GFCI BREAKER IN PANEL FOR CIRCUIT INDICATED.
2. PROVIDE JUNCTION BOX FOR CONNECTION TO WALL MOUNTED FAN. PROVIDE MINKA AIRE FAN F307-MBK, EXTERIOR WALL MOUNTED, BLACK FINISH. MOUNT J-BOX 9'-0" AFF. MOUNT FAN IN COORDINATION WITH DUCTWORK.
3. CONNECT EXHAUST FAN TO BE CONTROLLED VIA LIGHT SWITCH, TO RUN WHEN LIGHTS ARE TURNED ON.
4. MOUNT TWO (2) 6-POLE LIGHTING CONTACTORS AND (1) TIMECLOCK NEXT TO PANEL FOR CONTROL OF EXTERIOR PARKING AND EXTERIOR FACADE/SIGNAGE. PROVIDE 120V CIRCUIT TO COIL. PROVIDE PHOTOCELL ON ROOF, FACING NORTH. COORDINATE SCHEDULING WITH OWNER.
5. PROVIDE POWER TO EXTERIOR SIGNAGE. COORDINATE EXACT POWER REQUIREMENTS WITH SIGNAGE VENDOR AND ROUGH-IN REQUIREMENTS AND LOCATIONS. ROUTE CIRCUIT THROUGH LIGHTING CONTACTOR.
6. MONITORING MODULES FOR FIRE SPRINKLER SUPERVISORY SWITCHES AND FLOW SWITCH. COORDINATE WITH FIRE PROTECTION CONTRACTOR.
7. WP AUDIO/VISUAL SIGNAL INTERLOCKED WITH FIRE SPRINKLER FLOW SWITCH.
8. PROVIDE TELEPHONE TERMINAL BOARD, 4'X8X1/4 " PLYWOOD MOUNTED VERTICALLY ON WALL.
9. PROVIDE POWER TO HAND DRYERS. COORDINATE MOUNTING HEIGHT WITH ARCHITECTURAL ELEVATIONS.
10. PROVIDE POWER TO IRRIGATION PANEL. COORDINATE FINAL LOCATION WITH IRRIGATION DESIGN/BUILD CONTRACTOR.

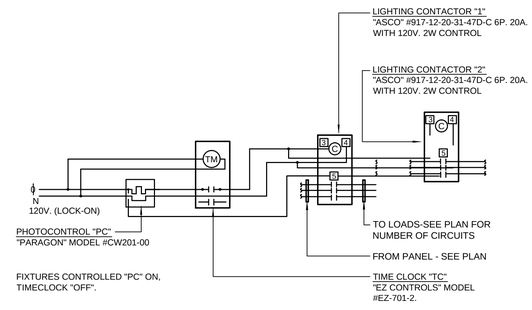

1 E2.0 LIGHTING CONTROL DIAGRAM

NO SCALE

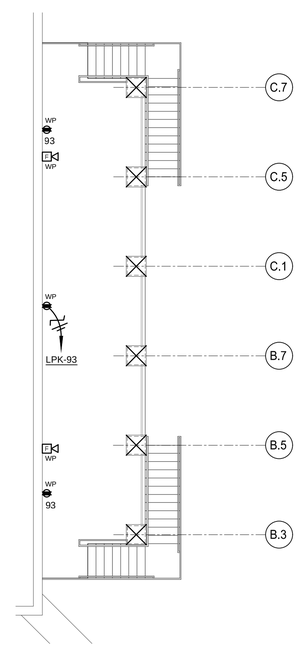

N TERRACE PLAN - POWER & SYSTEMS

SCALE: 1/8" = 1'-0"

COPYRIGHT © 2017 BAALMAN ARCHITECTS

BAALMAN ARCHITECTS
#2 Daniel Drive
O'Fallon, MO 63366
ph: 314.640.6212

Michael J. Baalman
ARCHITECT
License#: A-2012004035
Certificate of Authority: 2014003655

STRUCTURAL
AEDIFICA CASE ENGINEERING
796 MERUS COURT
ST. LOUIS, MO 63026
CONTACT: STEVE SACCO, P.E.
PHONE: 636-349-1600
FAX: 636-349-1730

M.E.P.
G&W ENGINEERING INC.
138 WELDON PKWY
MARYLAND HEIGHTS, MO 63043
CONTACT: KEVIN GRIESEMER
PHONE: 314-469-3737

New Restaurant, Banquet Center
& Corporate Offices at The Junction for:
Sugarfire Smokehouse
600 West Main
Wentzville, Missouri 63385

DATE	ISSUE	R#
06-15-18	PERMIT / BID SET	
06-26-18	ADDENDUM #1	

Expiration Date: Dec. 31, 2019

STATE OF MISSOURI
KEVIN S. GRIESEMER
NUMBER PE-23628
PROFESSIONAL ENGINEER

06-26-2018

Kevin S. Griesemer
ENGINEER

DRAWN BY: ASB, JD, DS

PROJECT NUMBER
16-076
DATE
June 15, 2018

SHEET
E2.0

FLOOR PLAN - POWER & SYSTEMS

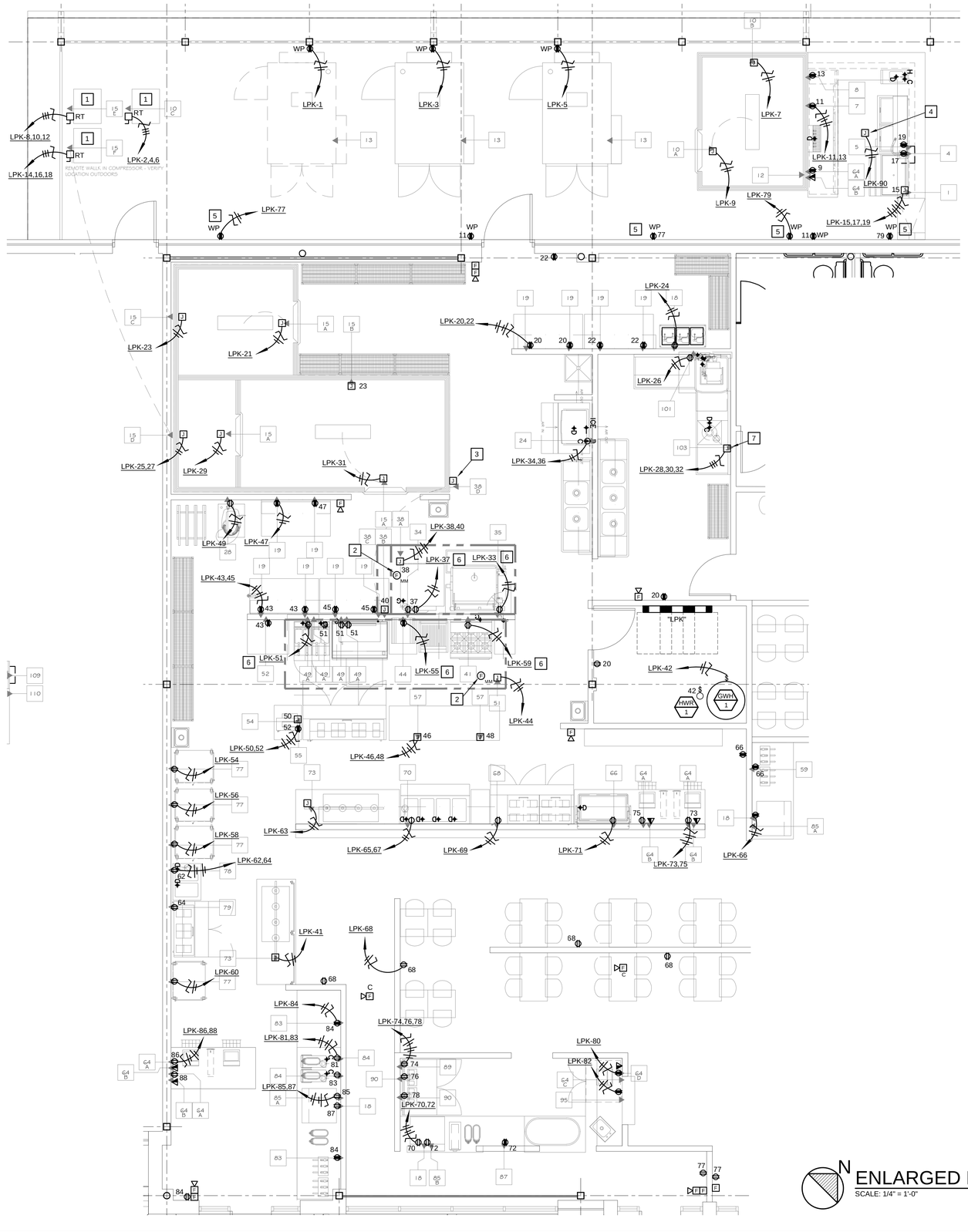

GENERAL NOTES - ELECTRICAL

A. REFER TO KITCHEN EQUIPMENT DRAWINGS FOR ADDITIONAL DETAIL, MOUNTING HEIGHTS AND WIRING DIAGRAMS FOR ELECTRICAL SCOPE OF WORK. CONNECT ALL FOOD SERVICE EQUIPMENT COMPLETE AND READY FOR OPERATION.

B. ALL 120V RECEPTACLES IN FOOD PREP AREA SHALL BE GFCI PROTECTED, PER NEC.

1 # PLAN NOTES - ELECTRICAL

1. COORDINATE FINAL PLACEMENT OF COMPRESSORS FOR KITCHEN COOLERS/FREEZERS, ON ROOF. ITEMS ARE SHOWN FOR CLARITY HERE, BUT SHALL BE INSTALLED ON THE ROOF, COORDINATED LOCATIONS WITH MECHANICAL CONTRACTOR.
2. PROVIDE FA MONITOR MODULE FOR HOOD FIRE SUPPRESSION SYSTEM NOTIFICATION.
3. JUNCTION BOX FOR ANSUL PULL STATION. SEE DETAIL ON KITCHEN EQUIPMENT DRAWINGS. ROUTE CONDUIT ON FACE OF COOLER WALL.
4. PROVIDE CEILING FAN RATED JUNCTION BOX. PROVIDE CEILING FAN BY EMERSON #HF1160BQ, 60" BQ, HEAT FAN.
5. MOUNT DUPLEX, GFCI, WEATHERPROOF RECEPTACLE, AT 10'-0" FOR FUTURE FAN.
6. INTERLOCK SHUNT TRIP CIRCUIT BREAKER WITH HOOD FIRE SUPPRESSION SYSTEM CONTROLS. COORDINATE WITH EQUIPMENT SUPPLIER.
7. CONNECT DISPOSAL, PUSHBUTTON CONTROL AND WATER SOLENOID VALVE COMPLETE PER MANUFACTURER'S INSTRUCTIONS.

N

ENLARGED KITCHEN PLAN - ELECTRICAL

SCALE: 1/4" = 1'-0"

COPYRIGHT © 2017 BAALMAN ARCHITECTS

BAALMAN ARCHITECTS
#2 Daniel Drive
O'Fallon, MO 63366
ph: 314.640.6212

Michael J. Baalman
ARCHITECT
License#: A-2012004035
Certificate of Authority: 2014003655

STRUCTURAL
AEDIFICA CASE ENGINEERING
796 MERUS COURT
ST. LOUIS, MO 63026
CONTACT: STEVE SACCO, P.E.
PHONE: 636-349-1600
FAX: 636-349-1730

M.E.P.
G&W ENGINEERING INC.
138 WELDON PKWY
MARYLAND HEIGHTS, MO 63043
CONTACT: KEVIN GRIESEMER
PHONE: 314-469-3737

New Restaurant, Banquet Center
& Corporate Offices at The Junction for:
Sugarfire Smokehouse
600 West Main
Wentzville, Missouri 63385

DATE	ISSUE	R#
06-15-18	PERMIT / BID SET	
06-26-18	ADDENDUM #1	

Expiration Date: Dec. 31, 2019

STATE OF MISSOURI
KEVIN S. GRIESEMER
NUMBER PE-23628
PROFESSIONAL ENGINEER

06-26-2018

Kevin S. Griesemer
ENGINEER

DRAWN BY: ASB, JD, DS

PROJECT NUMBER
16-076
DATE
June 15, 2018

SHEET
E2.1

KITCHEN PLAN - ELECTRICAL

GENERAL NOTES - LIGHTING

A. TRACK LIGHTING SHALL BE PROVIDED WITH A CURRENT LIMITING DEVICE, SUCH THAT EACH TRACK SHALL BE LIMITED TO 100W.

B. LIGHTING CONTACTOR DESIGN INTENT: ROUTE PARKING LOT LIGHTING, VOLLEYBALL COURT LIGHTING AND FLAG POLE LIGHTING THROUGH ONE CONTACTOR. ROUTE FACADE LIGHTING AND BUILDING SIGNAGE THROUGH ONE CONTACTOR.

PLAN NOTES - LIGHTING

1. ROUTE CIRCUIT THROUGH LIGHTING CONTACTOR.
2. PROVIDE REMOTE LIGHTING UNIT, POWERED VIA EXIT SIGN, FOR EMERGENCY EGRESS LIGHTING. MOUNT ABOVE DOOR.
3. STEM HANG EMERGENCY LIGHTING UNIT FROM STRUCTURE ABOVE. HANG EVEN WITH TRACK LIGHTING.

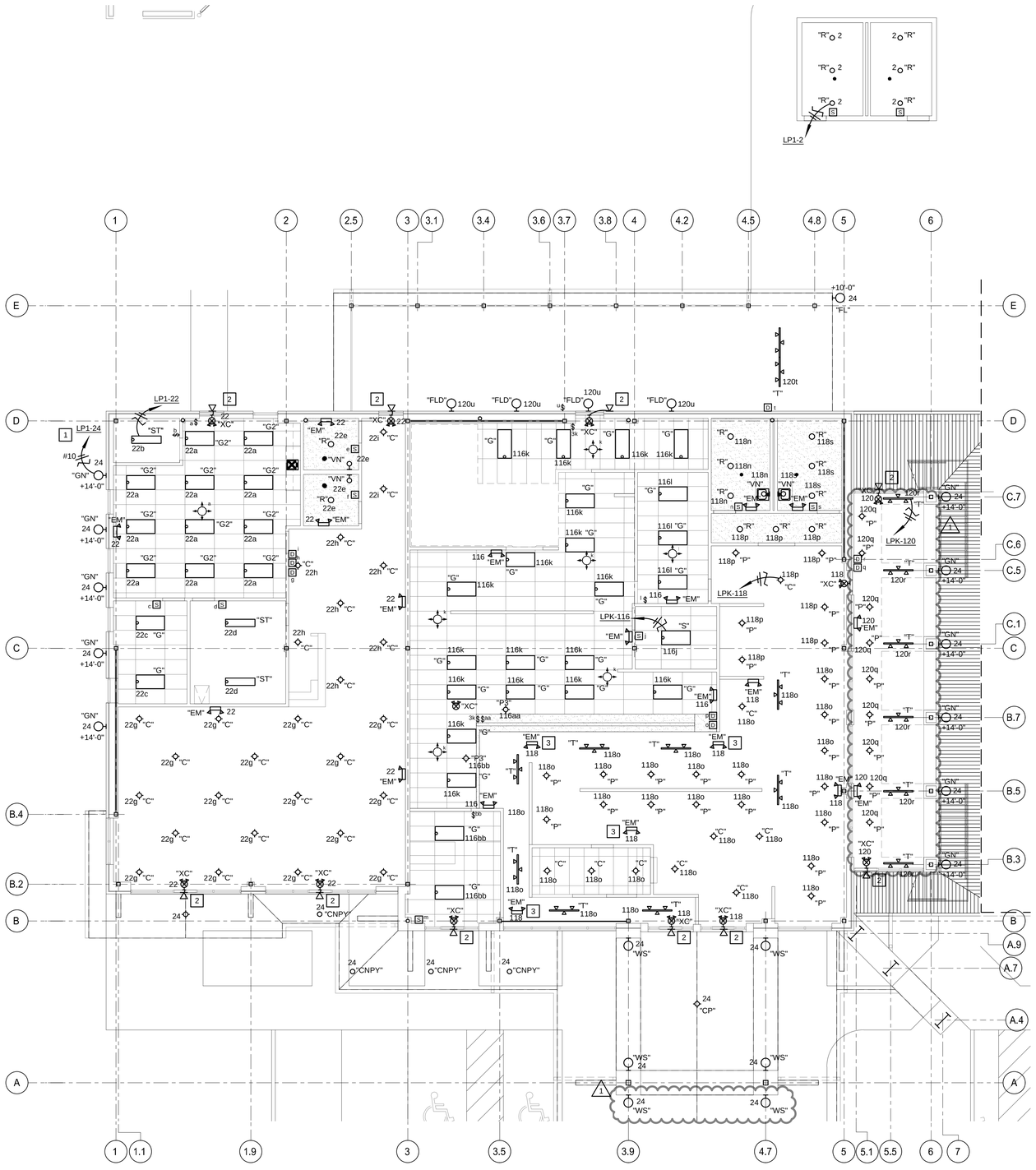

N CEILING PLAN - LIGHTING
SCALE: 1/8" = 1'-0"

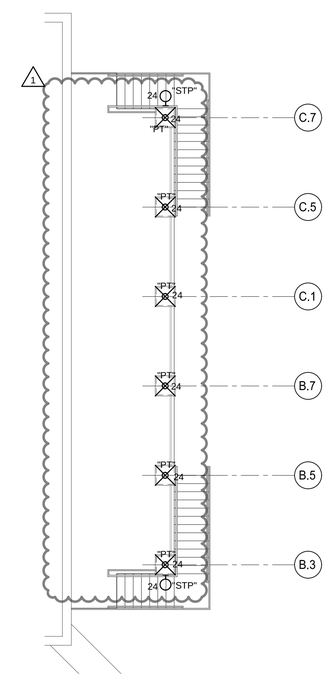

N TERRACE PLAN - LIGHTING
SCALE: 1/8" = 1'-0"

COPYRIGHT © 2017 BAALMAN ARCHITECTS

BAALMAN ARCHITECTS
#2 Daniel Drive
O'Fallon, MO 63366
ph: 314.640.6212

Michael J. Baalman
ARCHITECT
License#: A-2012004035
Certificate of Authority: 2014003655

STRUCTURAL
AEDIFICA CASE ENGINEERING
796 MERUS COURT
ST. LOUIS, MO 63026
CONTACT: STEVE SACCO, P.E.
PHONE: 636-349-1600
FAX: 636-349-1730

M.E.P.
G&W ENGINEERING INC.
138 WELDON PKWY
MARYLAND HEIGHTS, MO 63043
CONTACT: KEVIN GRIESEMER
PHONE: 314-469-3737

New Restaurant, Banquet Center
& Corporate Offices at The Junction for:
Sugarfire Smokehouse
600 West Main
Wentzville, Missouri 63385

DATE	ISSUE	R#
06-15-18	PERMIT / BID SET	
06-26-18	ADDENDUM #1	

Expiration Date: Dec. 31, 2019

STATE OF MISSOURI
KEVIN S. GRIESEMER
NUMBER PE-23628
PROFESSIONAL ENGINEER

06-26-2018

Kevin S. Griesemer
ENGINEER

DRAWN BY: ASB, JD, DS

PROJECT NUMBER
16-076
DATE
June 15, 2018

SHEET
E3.0
CEILING PLAN - LIGHTING